Listado de Muebles

Código	Descripción muebles	Página	Código	Descripción muebles	Página
BR-101	Mesa Bienvenida	2	BR-152	Brazo recto U x 30 cm	38
BR-102	Mesa Bienvenida Baja	4	BR-153	Marco madera 120	39
BR-103	Mesa Redonda	5	BR-155	Armario 240x310	40
BR-104	Mesa dos niveles	6	BR-156	Armario 180x310	41
BR-110	Cubo Bajo Abierto Ruedas	8	BR-155 y 156	Montaje Armarios	77
BR-111	Cubo Bajo	8	BR-157	Ganchera	42
BR-112	Cubo Medio Bajo	9	BR-160	Entrepaño S6045	43
BR-113	Cubo Medio Medio	9	BR-161	Entrepaño S10045	44
BR-114	Cubo Alto	10	BR-162	Entrepaño S12045	45
BR-115	Cubo Largo	10	BR-163	Entrepaño T6045	46
BR-116	Mesa de Noche	11	BR-164	Entrepaño T10045	47
BR-117	Cubo alto abierto	11	BR-165	Entrepaño T12045	48
~~BR-120~~	~~Góndola 1~~	~~12~~	BR-166	Entrepaño T14545	49
BR-121	Góndola 2	14	BR-167	Entrepaño T12060	50
BR-122	Góndola 3	16	BR-168	Entrepaño S6060	63
BR-123	Porta-Almohadas	17	BR-169	Entrepaño S12060	62
BR-125	Cama	18	BR-170	Portaprecio	64
BR-126	Espaldar cama	19	BR-171	Hablador de mesa 10.5x14 cm	65
BR-127	Bases cama vitrina	20	BR-172	Hablador de mesa 14x21.6cm	66
BR-128	Entrepaño para individuales	78	BR-173	Hablador de mesa 21x28 cm	67
BR-129	Tarima tapetes	79	BR-174	Hablador de piso 14x21.6	68
BR-130	Módulo de Pago Derecho	21	BR-175	Portacampaña 50x70	69
BR-131	Módulo de Pago Izquierdo	23	BR-176	Portacampaña 70x70	70
BR-132	Módulo de Pago Central	24	BR-177	Herraje para retablos	71
BR-135	Modulo de servicio A	27	BR-178	Logotipo madera 60 cm	72
BR-136	Modulo de servicio B	28	BR-179	Monograma	73
BR-137	Modulo de Pago Auxiliar	30	BR-180	Logotipo madera 100 cm	74
BR-140	Cremallera 240	31	BR-181	Aviso Góndolas	75
BR-141	Cremallera 300	31	BR-182	Aviso Porta-almohadas	76
BR-142	Soporte para entrepaño 45 derecho	32	BR-183	Espaldar Cama Vitrina	80
BR-143	Soporte para entrepaño 45 izquierdo	33	BR-184	Base unidad	81
BR-144	Soporte para entrepaño 60 cm Derecho	34	BR-185	Base múltiple	82
BR-145	Barra corta	35	Br-200	Rejilla	57
BR-146	Soporte Armarios	36	Br-201	Nivel de mesa 1	58
BR-147	Cremallera 217 Modulo Servicio	31	Br-202	Nivel de mesa 2	59
BR-148	Soporte para entrepaño 60 cm Izquierdo	61		Anexo Entrepaños	51
BR-149	Herraje para instalación cremalleras	63		Render Mobiliario	52
BR-150	Espejo	37			
BR-150	Apoyo Espejo	83			

Listado de Materiales & Acabados

REFERENCIA	DESCRIPCION
MD-01	Madera Natural Flormorado
MD-02	Madecor 15 mm gris cristal
FM-01	Fórmica F8 Alumina 2103 MT
FM-02	Laminado de madera en H3331 ST10 Roble de Nebraska Natural Egger
FM-03	Fórmica F8 Grafito 2174 MT
FM-04	Fórmica F8 Rojo Ruby 2135 MT
FM-05	Tablero de Tablemac Vienés de colección vintage 4 mm
PE-01	Pintura electroestática negro semimate microtexturizado
PE-02	Pint. electroestática microtexturizado aluminio MCTX EP 303B de Acabado
PE-03	Pintura electroestática rojo liso
PE-04	Pintura electroestática blanco microtexturizado semi-mate
RU-01	Rueda 2" giro completo de goma negra plataforma
RU-02	Rueda 2" goma con freno negra
NI-01	Niveladores 1" circulares de rosca negros
NI-02	Niveladores 1/2" circulares de rosca negros
ES-01	Espejo cristal 5 mm
PC-01	Perfil cuadrado de 1" Calibre 14
PC-02	Varilla de 1/4"
PC-03	Perfil cuadrado de 3/4" Calibre 14
PC-04	Perfil redondo 1/2"
PC-05	Perfil cuadrado de 1/2" calibre 14
PC-06	Varilla redonda de 6 mm
CS-01	Canto sólido humo 2108
CS-02	Canto termoplástico Roble de Nebraska Natural ST10
CS-03	Canto sólido Grafito 2174 MT
PL-01	Platina calibre 12
PS-01	Poliestireno negro calibre 60
AC-01	Acrilico cristal 5 mm

Referencias de Color de Materiales

Cuadro Convenciones

CR	Corriente regulada		
CD	Corriente directa	P	Pánico
D	Datos	A	Audio

Actualizado:1 de octubre de 2015

NOTA :

1. Todos los materiales y acabados deben ser aprobados por MADI por escrito.
2. Se deben presentar muestras de acabados de materiales y acabados a MADI

Appr | Zone | Revision Notes | Date | No. | Issue Notes | Date | No.

Date: 12/05/2015
Revision: Revision
Project ID: MADI
Drawing Code: Drawing Code
CAD File Name: Muebles_Brissa
PAGE Date: 00/00/00

Designed By: Bianca Castillo
Drawn By: Bianca Castillo
Checked By: MA
Reviewed By: Marcelo Albertal
Submitted By: BC
Project Manager: Marcelo Albertal

Design Firm: MADI
Calle 88 #10-62 Bogota, DC, Colombia
3017867314
biancacastillog@gmail.com

Consultant: Marcelo Albertal design International

Project Title: Mobiliario BRISSA 2015

Sheet Title: Materiales & Acabados

Scale: Ver escala de cada dibujo

Sheet No. 1 of 83

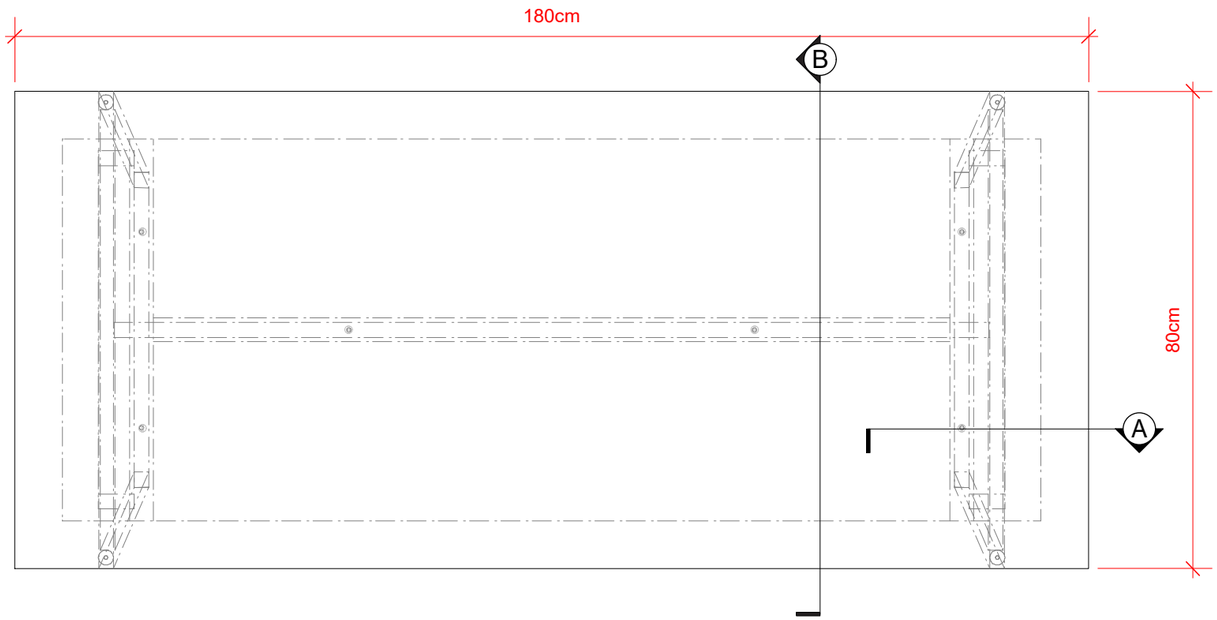

1 Vista Superior
Scale: 1:10

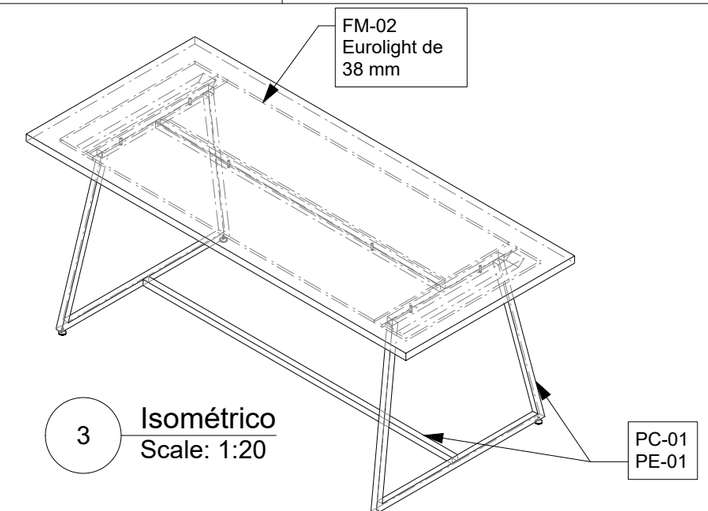

3 Isométrico
Scale: 1:20

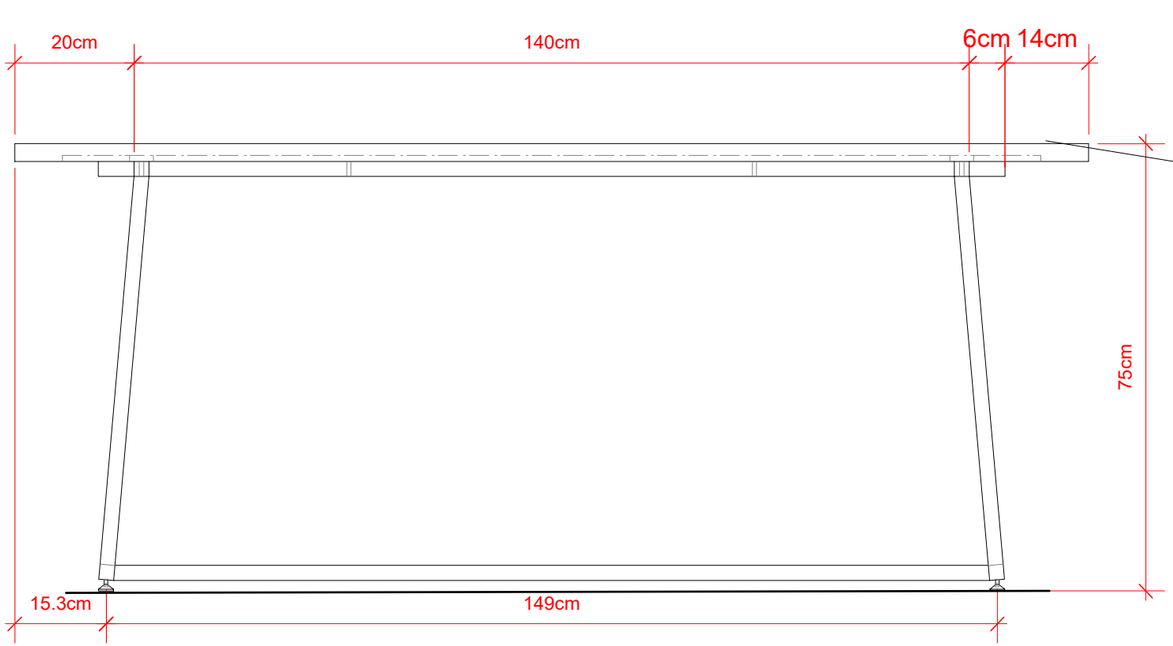

2 Vista Frontal
Scale: 1:10

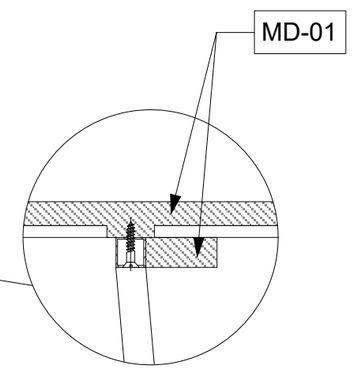

A Detalle Unión
Scale: 1:5

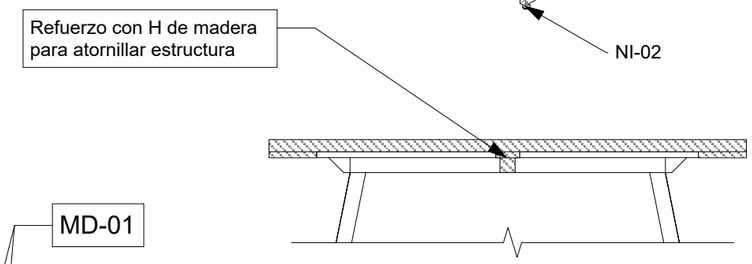

B Detalle H refuerzo
Scale: 1:10

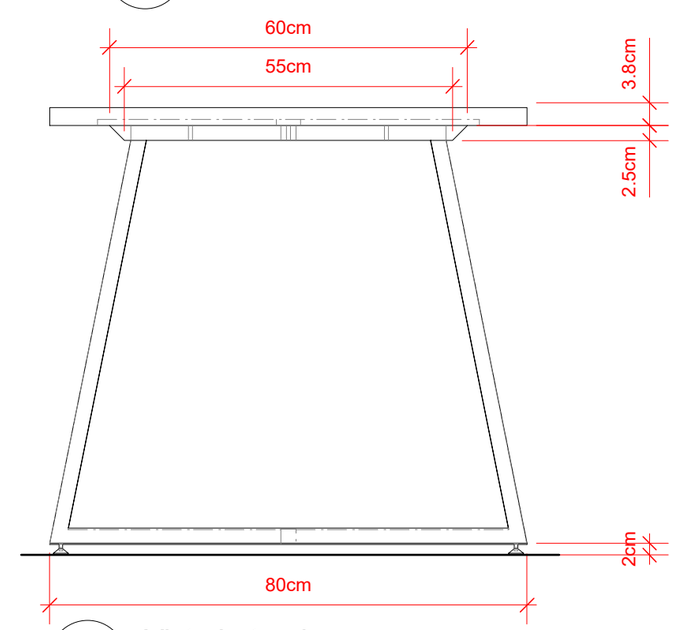

4 Vista Lateral
Scale: 1:10

Actualizado: 30 de septiembre de 2015

No.	Date	Issue Notes	No.	Date	Revision Notes	Zone	Appr

Date 06/05/15
Revision Revisión
Project ID MADI
Drawing Code Drawing_Code
CAD File Name Muebles_Brissa
Project Date 00/00/00

Designed By Bianca Castillo
Drawn By Bianca Castillo
Checked By MA
Reviewed By Marcelo Albertal
Submitted By BC
Project Manager Marcelo Albertal

Design Firm
MADI
Calle 88 #10-62 Bogota, DC, Colombia
3017867314
biancacastillog@gmail.com

Consultant
Marcelo Albertal design International

Project Title
Mobiliario BRISSA
2015

Sheet Title
BR-101 Mesa Bienvenida

Scale
Ver escala de cada dibujo

Sheet No.
2
of
83

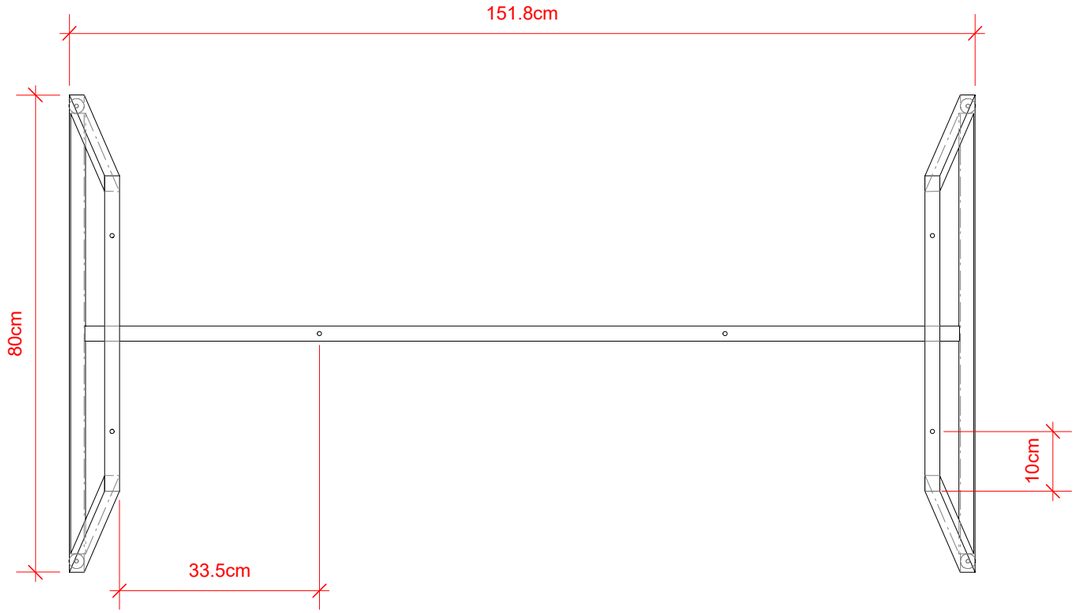

1 Vista Superior
Scale: 1:10

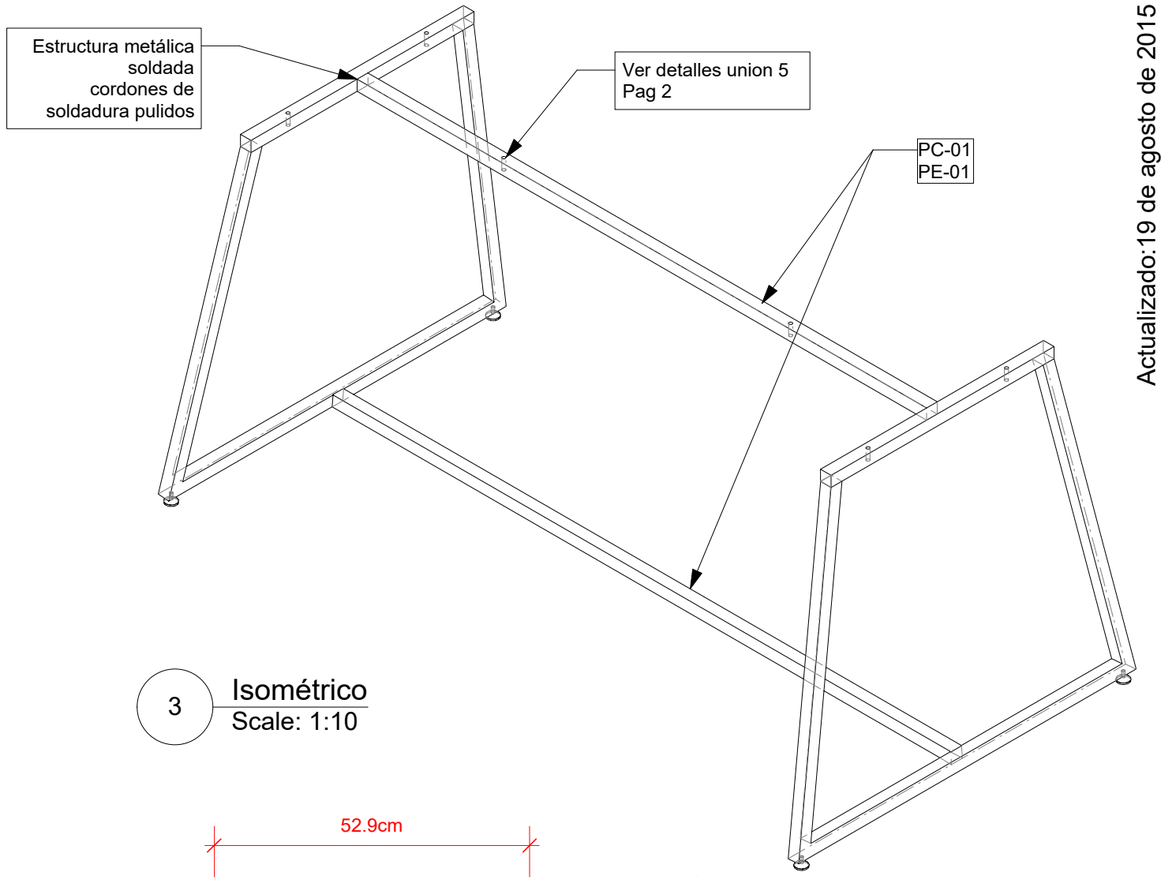

3 Isométrico
Scale: 1:10

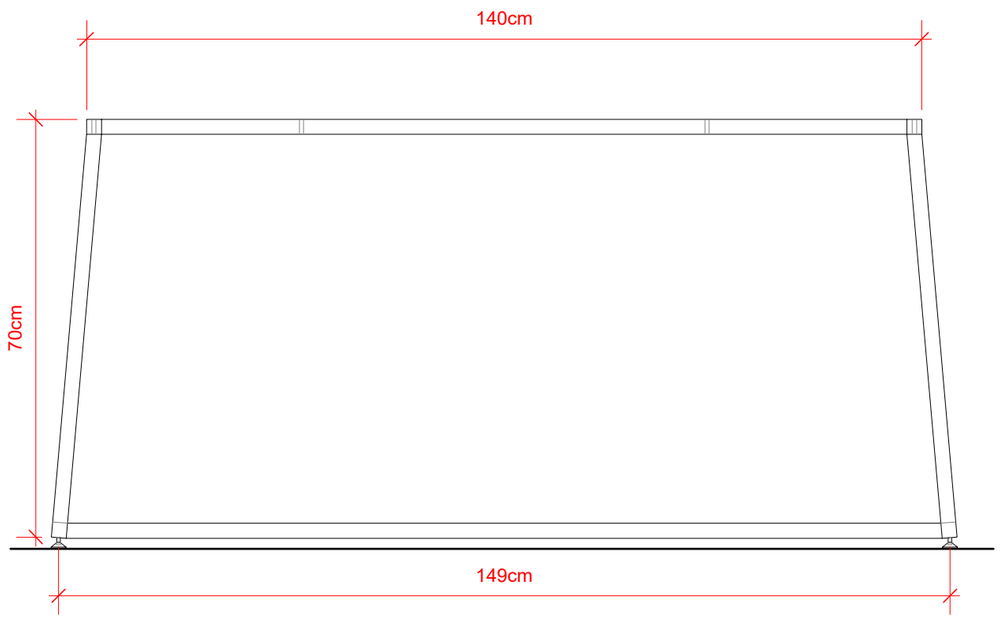

2 Vista Frontal
Scale: 1:10

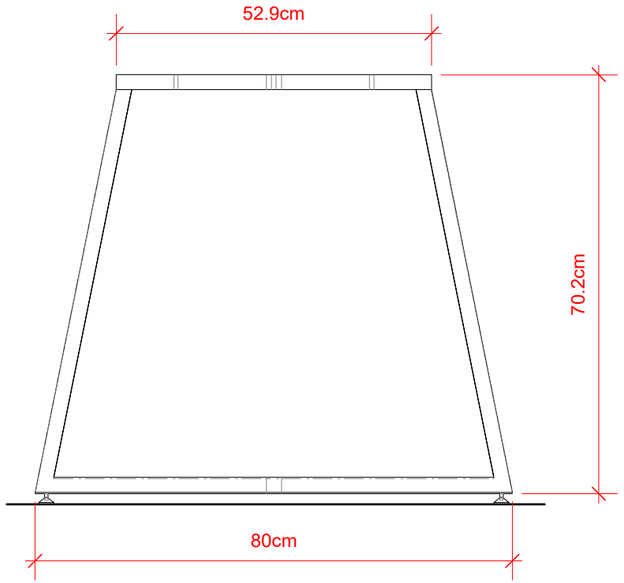

4 Vista Lateral
Scale: 1:10

Actualizado:19 de agosto de 2015

No.	Date	Issue Notes	No.	Date	Revision Notes	Zone	Appr

Date 06/05/15
Revision Revision
Project ID MADI
Drawing Code Drawing Code
CAD File Name Muebles_Brissa
Project Date 00/00/00

Designed By Bianca Castillo
Drawn By Bianca Castillo
Checked By MA
Reviewed By Marcelo Albertal
Submitted By BC
Project Manager Marcelo Albertal

Design Firm
MADI
Calle 88 #10-62 Bogota, DC, Colombia
3017867314
biancacastillog@gmail.com

Consultant
Marcelo Albertal design International

Project Title
Mobiliario BRISSA
2015

Sheet Title
BR-101 Mesa Bienvenida
Estructura metálica

Scale
Ver escala de cada dibujo

Sheet No.
3
of
83

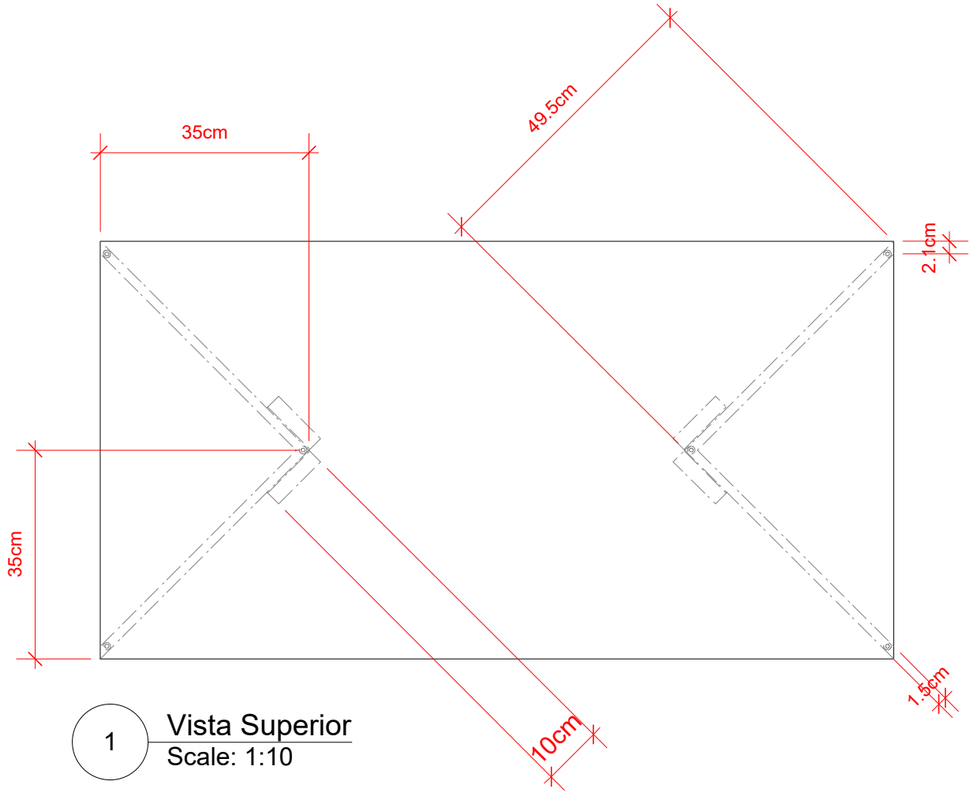

1 Vista Superior
Scale: 1:10

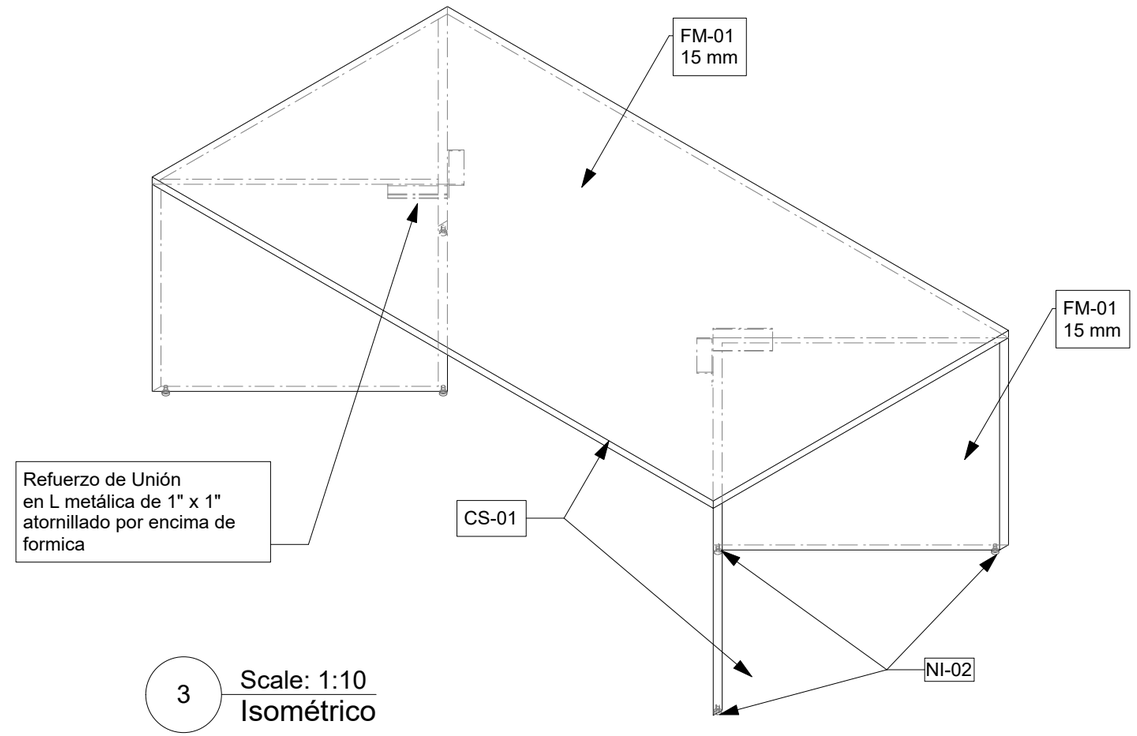

3 Scale: 1:10
Isométrico

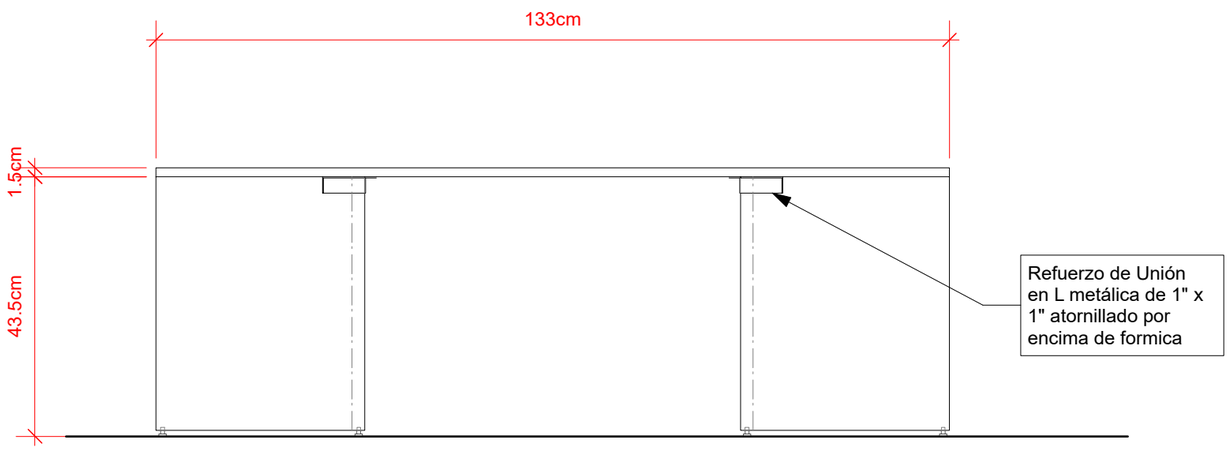

2 Vista Frontal
Scale: 1:10

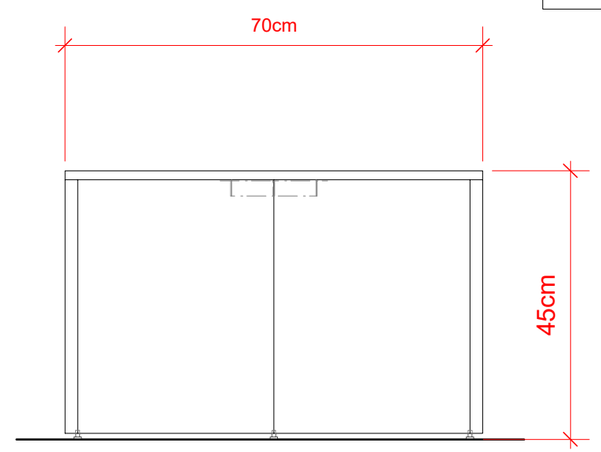

4 Vista Lateral
Scale: 1:10

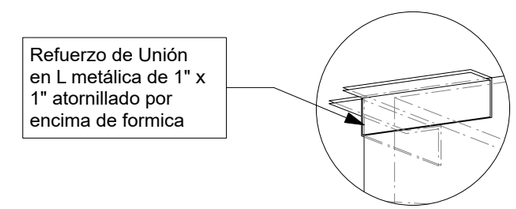

5 Vista desde abajo
Isométrico

Actualizado: 30 de septiembre de 2015

No.	Date	Issue Notes	No.	Date	Revision Notes	Zone	Appr

Date 06/05/15
Revision Revisión
Project ID MADI
Drawing Code Drawing Code
CAD File Name Muebles_Brissa
Project Date 00/00/00

Designed By Bianca Castillo
Drawn By Bianca Castillo
Checked By MA
Reviewed By Marcelo Albertal
Submitted By BC
Project Manager Marcelo Albertal

Design Firm
MADI
Calle 88 #10-62 Bogota, DC, Colombia
3017867314
biancacastillog@gmail.com

Consultant
Marcelo Albertal design international

Project Title
Mobiliario BRISSA
2015

Sheet Title
BR-102 Mesa Bienvenida Baja

Scale
Ver escala de cada dibujo

Sheet No.
4
of
83

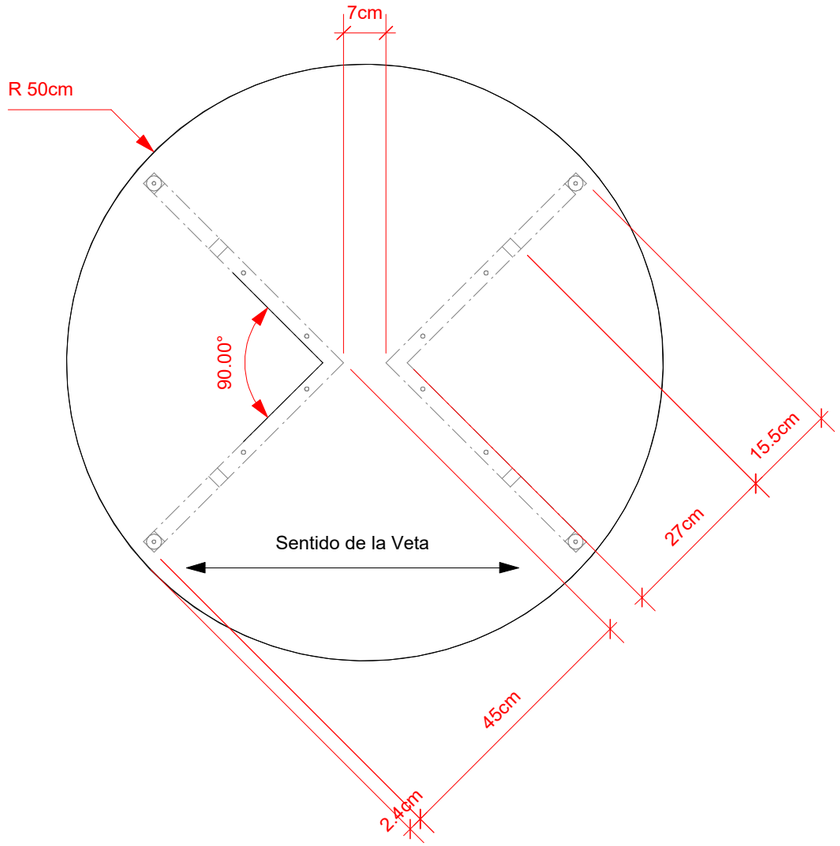

1 Vista Superior
Scale: 1:10

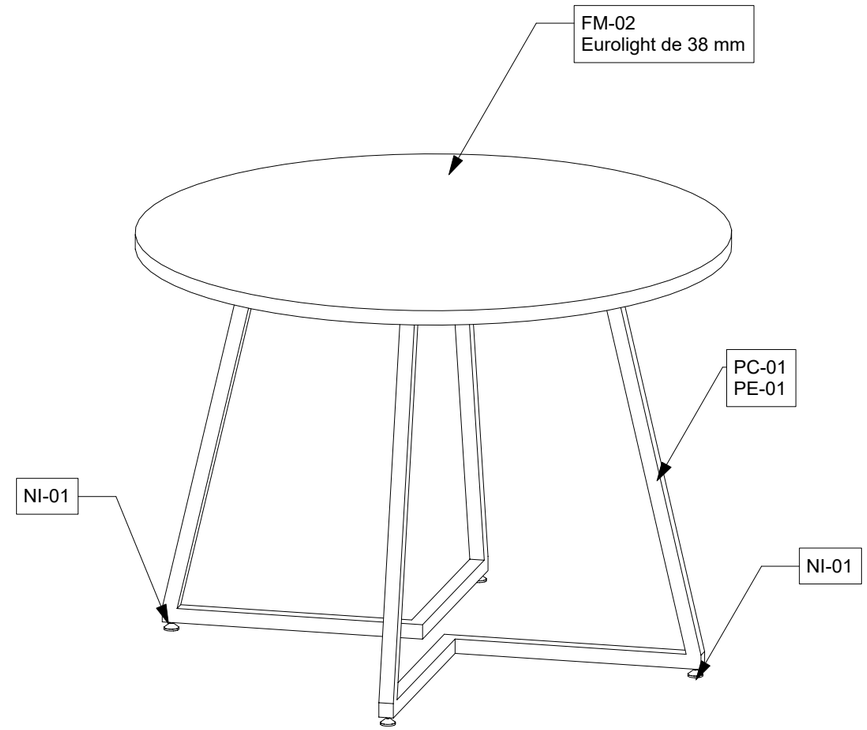

3 Perspectiva
Scale: 1:10

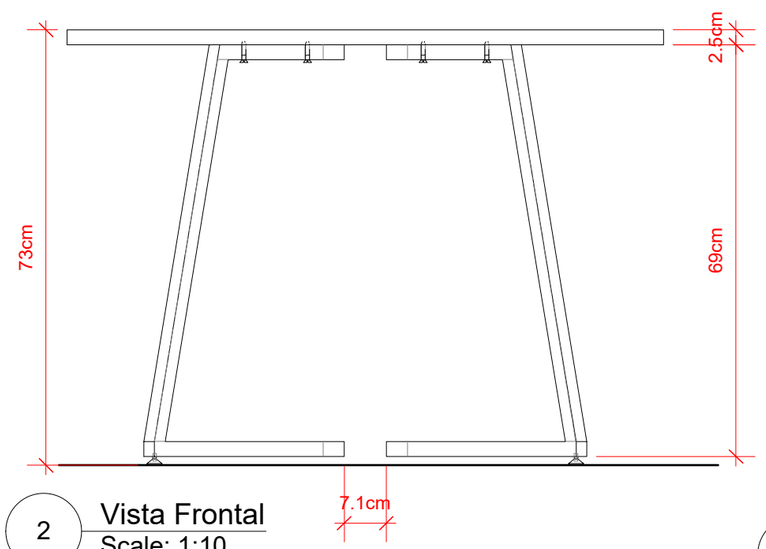

2 Vista Frontal
Scale: 1:10

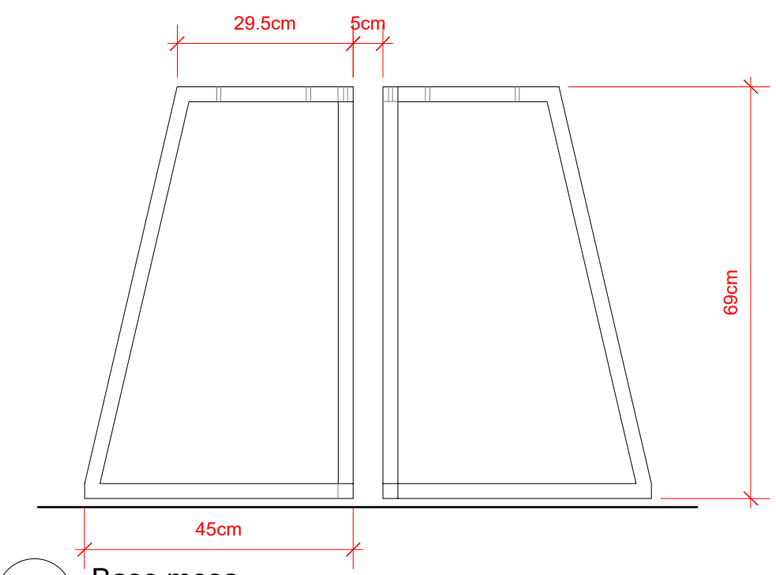

4 Base mesa
Scale: 1:10

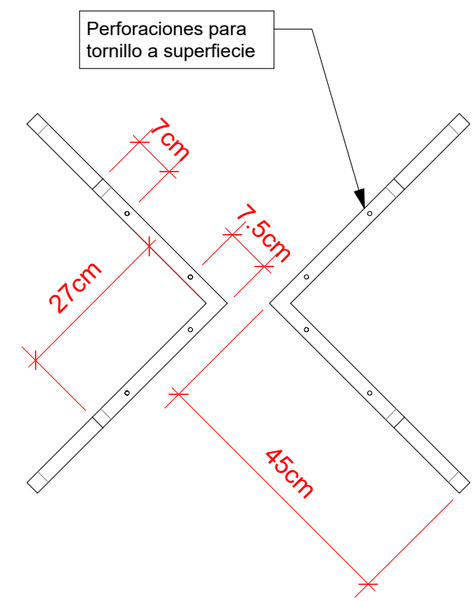

5 Vista Superior
Scale: 1:10

Actualizado:1 de octubre de 2015

No.	Date	Issue Notes	No.	Date	Revision Notes	Zone	Appr

Date: 06/05/15
Revision: Revision
Project ID: MADI
Drawing Code: Drawing Code
CAD File Name: Muebles_Brissa
Plot Date: 00/00/00

Designed By: Blanca Castillo
Drawn By: Blanca Castillo
Checked By: MA
Reviewed By: Marcelo Albertal
Submitted By: BC
Project Manager: Marcelo Albertal

Design Firm: MADI
Calle 88 #10-62 Bogota, DC, Colombia
3017867314
biancacastillog@gmail.com

Consultant: Marcelo Albertal design international

Project Title: Mobiliario BRISSA 2015

Sheet Title: BR-103 Mesa Redonda

Scale: Ver escala de cada dibujo

Sheet No. 5 of 83

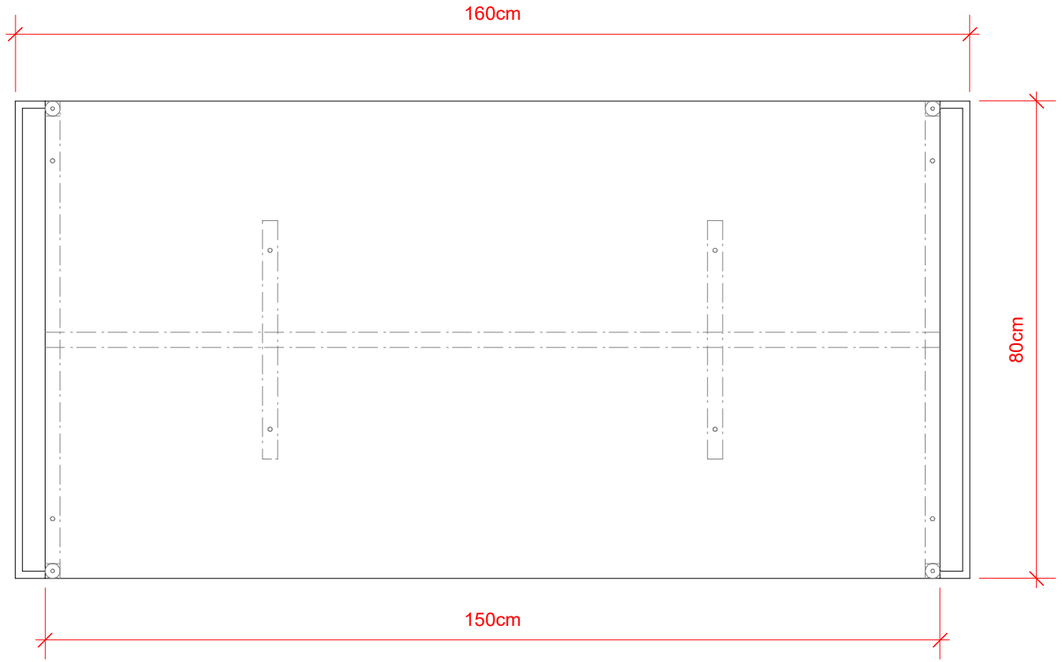

1 Vista Superior
Scale: 1:10

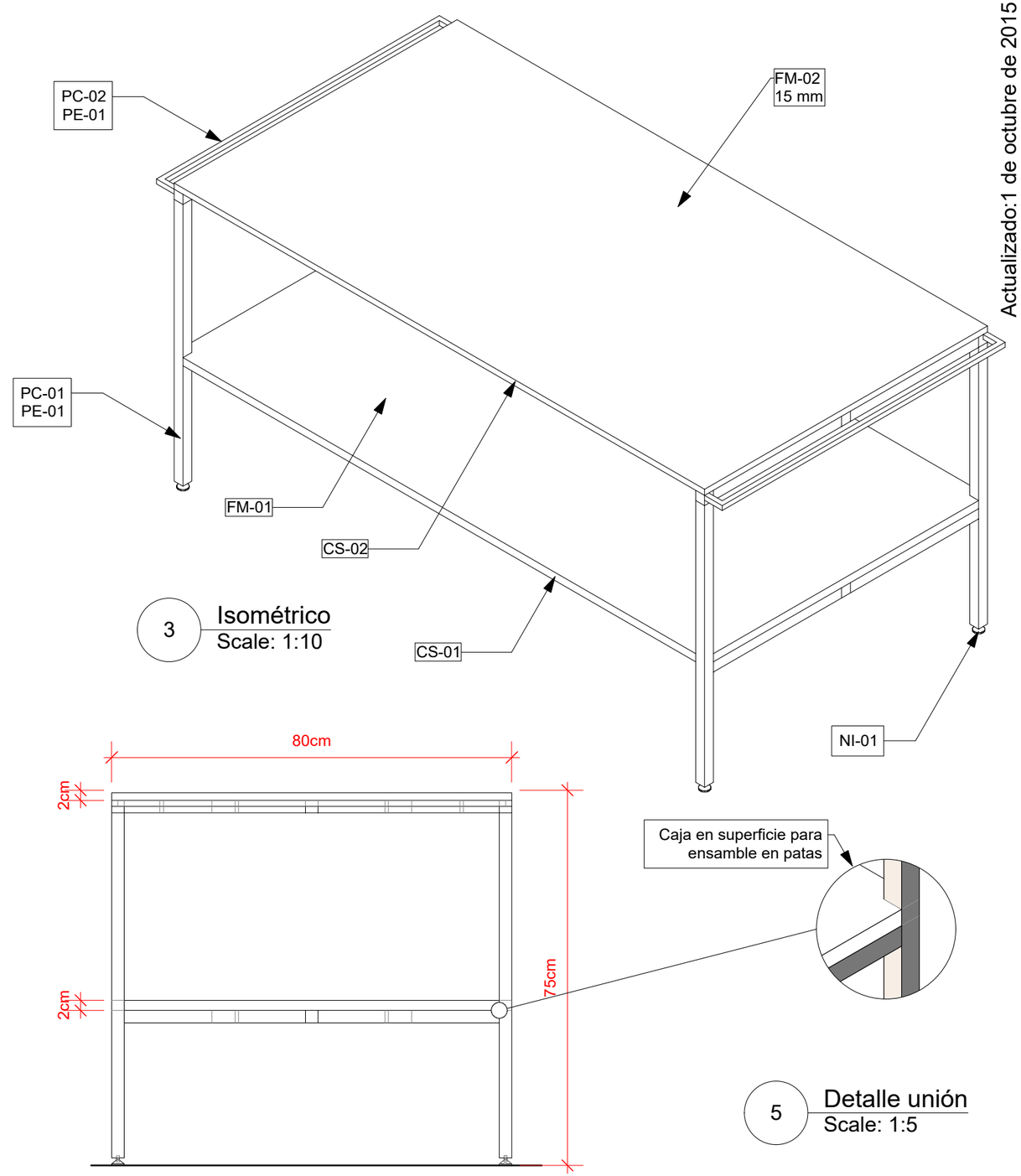

3 Isométrico
Scale: 1:10

5 Detalle unión
Scale: 1:5

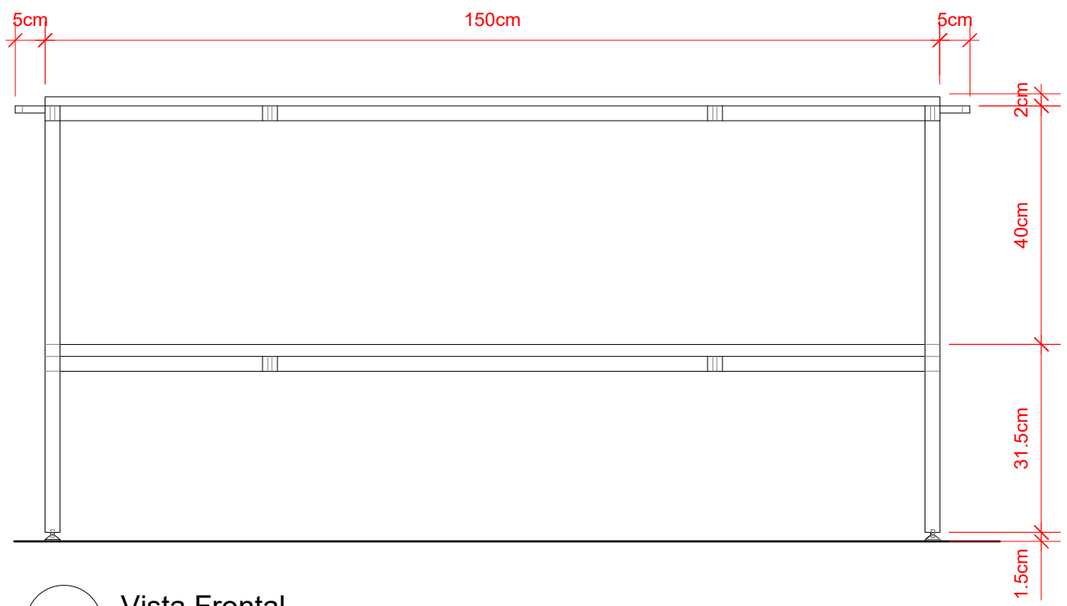

2 Vista Frontal
Scale: 1:10

4 Vista Lateral
Scale: 1:10

Actualizado:1 de octubre de 2015

No.	Date	Issue Notes	No.	Date	Revision Notes	Zone	Appr

Date 06/05/15
Revision Revisión
Project ID MADI
Drawing Code
CAD File Name Muebles_Brissa
Plot Date 00/00/00

Designed By Bianca Castillo
Drawn By Bianca Castillo
Checked By MA
Reviewed By Marcelo Albertal
Submitted By BC
Project Manager Marcelo Albertal

Design Firm
MADI
Calle 88 #10-62 Bogota, DC, Colombia
3017867314
biancacastillog@gmail.com

Consultant
Marcelo Albertal design International

Project Title
Mobiliario BRISSA
2015

Sheet Title
BR-104 Mesa dos Niveles

Scale
Ver escala de cada dibujo

Sheet No.
6
of
83

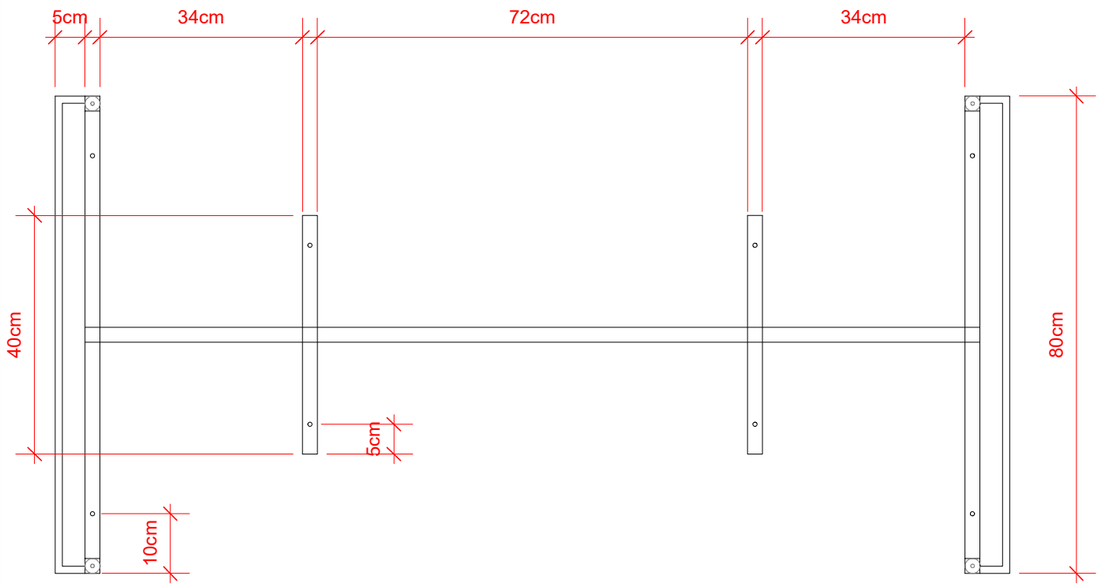

1 Vista Superior
Scale: 1:10

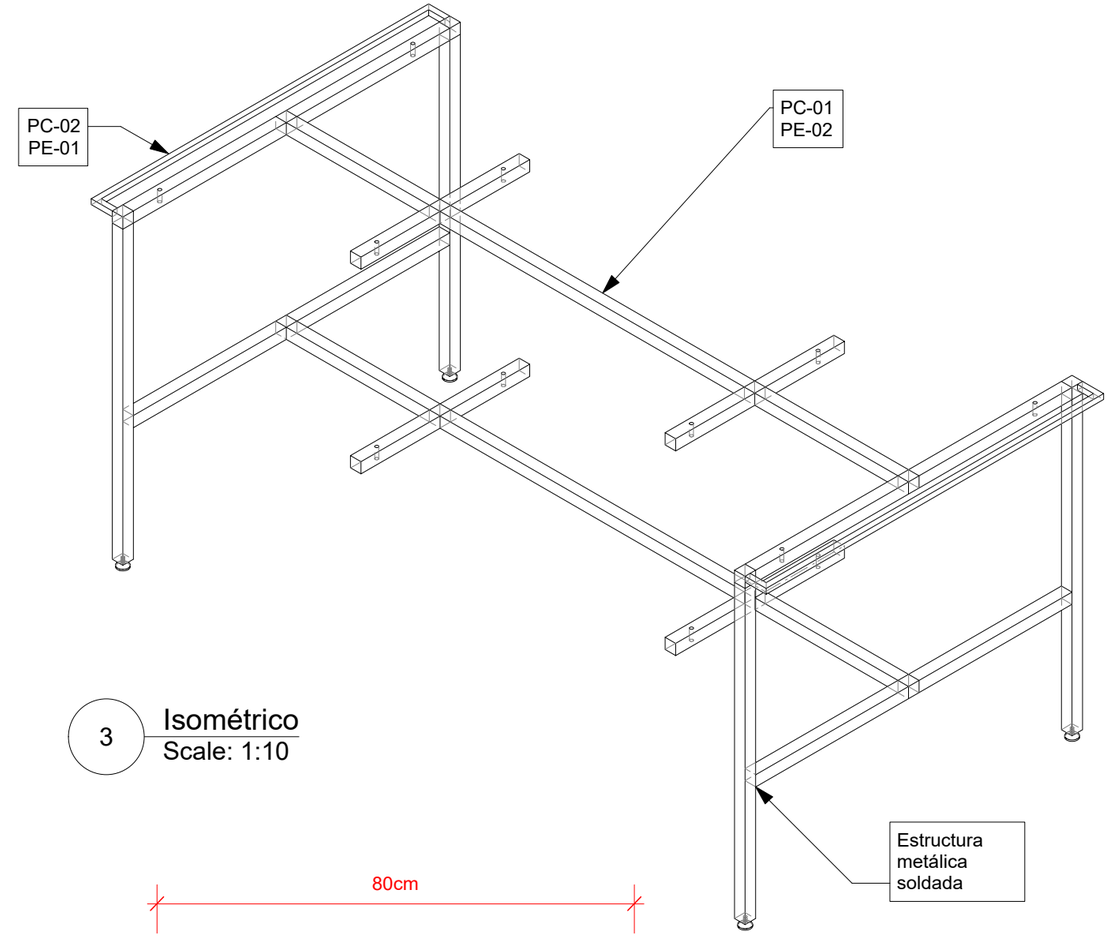

3 Isométrico
Scale: 1:10

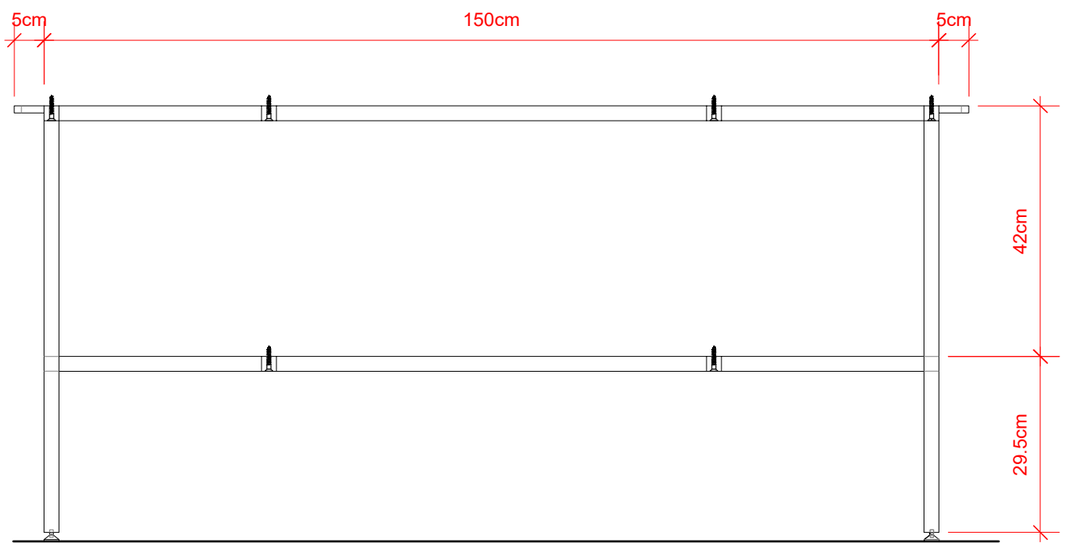

2 Vista Frontal
Scale: 1:10

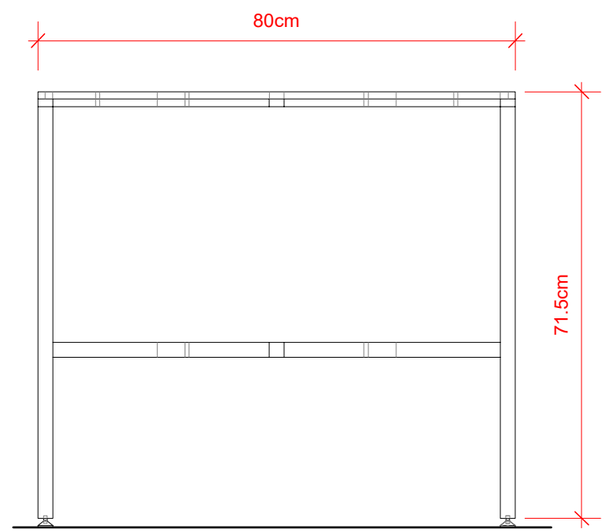

4 Vista Lateral
Scale: 1:10

Actualizado:1 de octubre de 2015

No.	Date	Issue Notes	No.	Date	Revision Notes	Zone	Appr

Date	06/05/15
Revision	Revisión
Project ID	MADI
Drawing Code	Drawing Code
CAD File Name	Muebles_Brissa
Project Date	00/00/00
Designed By	Bianca Castillo
Drawn By	Bianca Castillo
Checked By	MA
Reviewed By	Marcelo Albertal
Submitted By	BC
Project Manager	Marcelo Albertal

Design Firm
MADI
Calle 88 #10-62 Bogota, DC, Colombia
3017867314
biancacastillog@gmail.com

Consultant
Marcelo Albertal design international

Project Title
Mobiliario BRISSA
2015

Sheet Title
BR-104 Mesa dos Niveles
Estructura metálica

Scale
Ver escala de cada dibujo

Sheet No.
7
of
83

BR-110 Cubo Bajo Abierto Ruedas

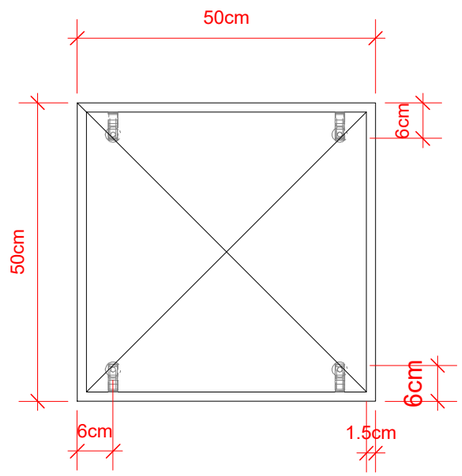

1 Vista Superior
Scale: 1:10

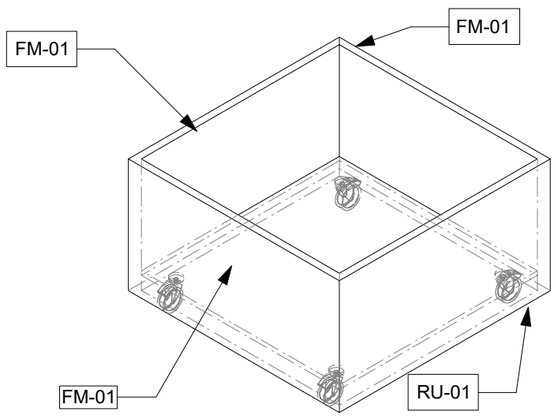

3 Isométrico
Scale: 1:10

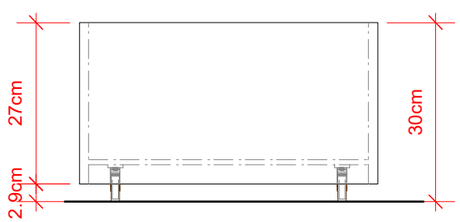

2 Vista Frontal
Scale: 1:10

BR-111 Cubo Bajo

NOTA: Cubos en 9 mm. En caso de no contar con la formica se hace econ referencia Tablemac.

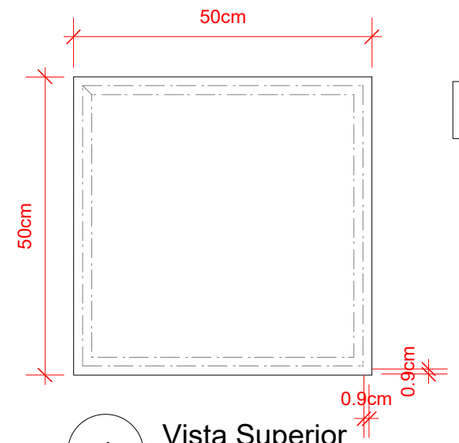

4 Vista Superior
Scale: 1:10

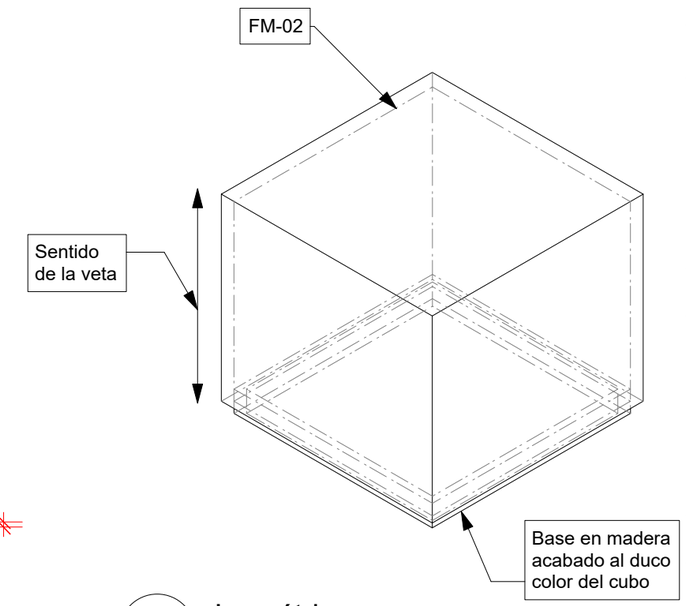

6 Isométrico
Scale: 1:10

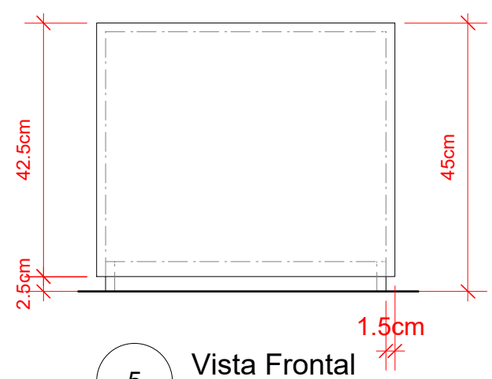

5 Vista Frontal
Scale: 1:10

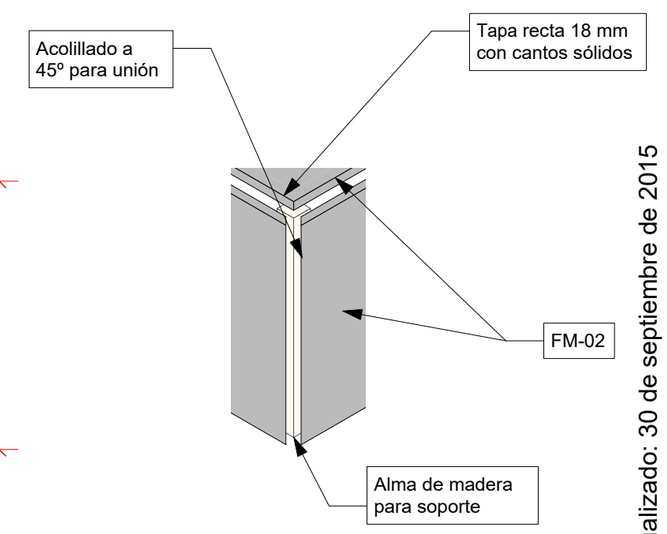

7 Ensamble Tablemac 18 mm
Scale: 1:10

Actualizado: 30 de septiembre de 2015

Appr	
Zone	
Revision Notes	
Date	
No.	
Issue Notes	
Date	
No.	

Date 06/05/15
Revision Revisión
Project ID MADI
Drawing Code Drawing Code
CAD File Name Muebles_Brissa
Revision Date 00/00/00

Designed By Blanca Castillo
Drawn By Blanca Castillo
Checked By MA
Reviewed By Marcelo Albertal
Submitted By BC
Project Manager Marcelo Albertal

Design Firm
MADI
Calle 88 #10-62 Bogota, DC, Colombia
3017867314
biancacastillog@gmail.com

Consultant
Marcelo Albertal design international

Project Title
Mobiliario BRISSA
2015

Drawn Title
BR-110 Cubo Bajo Abierto Ruedas
BR-111 Cubo Bajo

Scale
Ver escala de cada dibujo

Sheet No.
8
of
83

BR-112 Cubo Medio Bajo

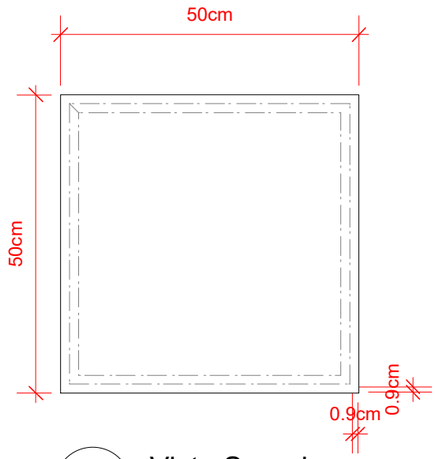

1 Vista Superior
Scale: 1:10

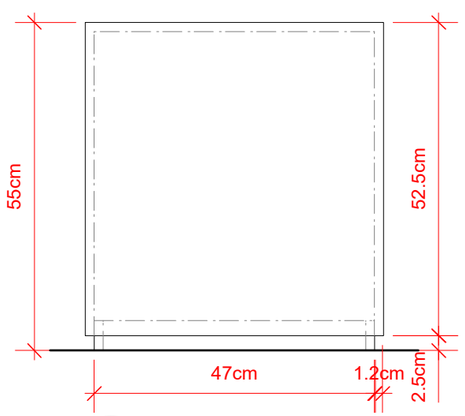

2 Vista Frontal
Scale: 1:10

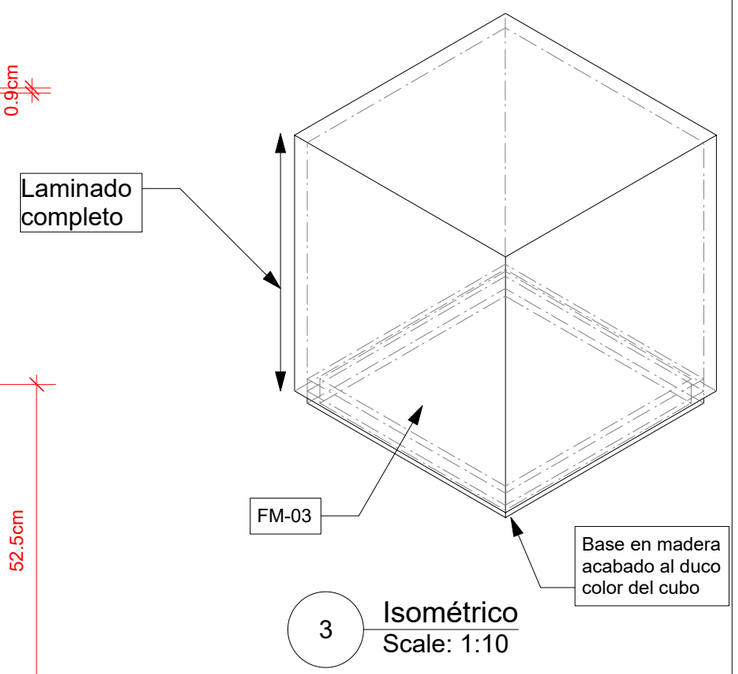

3 Isométrico
Scale: 1:10

NOTA: Cubos en 9 mm.

BR-113 Cubo Medio Medio

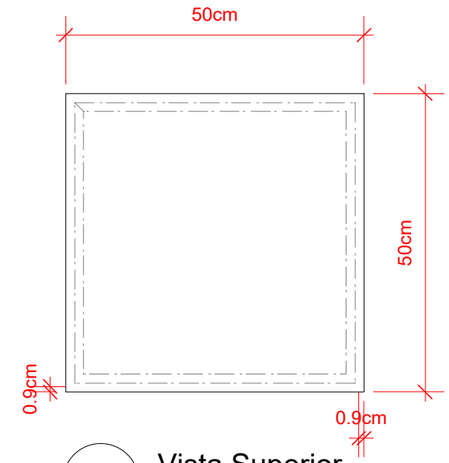

4 Vista Superior
Scale: 1:10

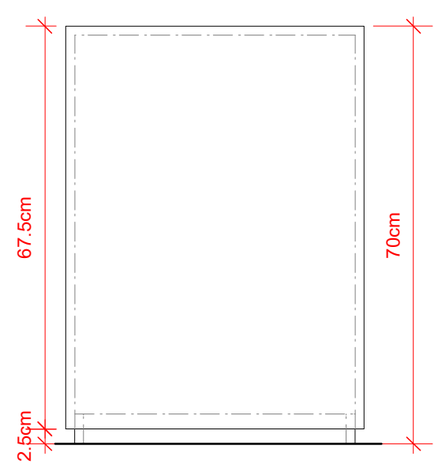

5 Vista Frontal
Scale: 1:10

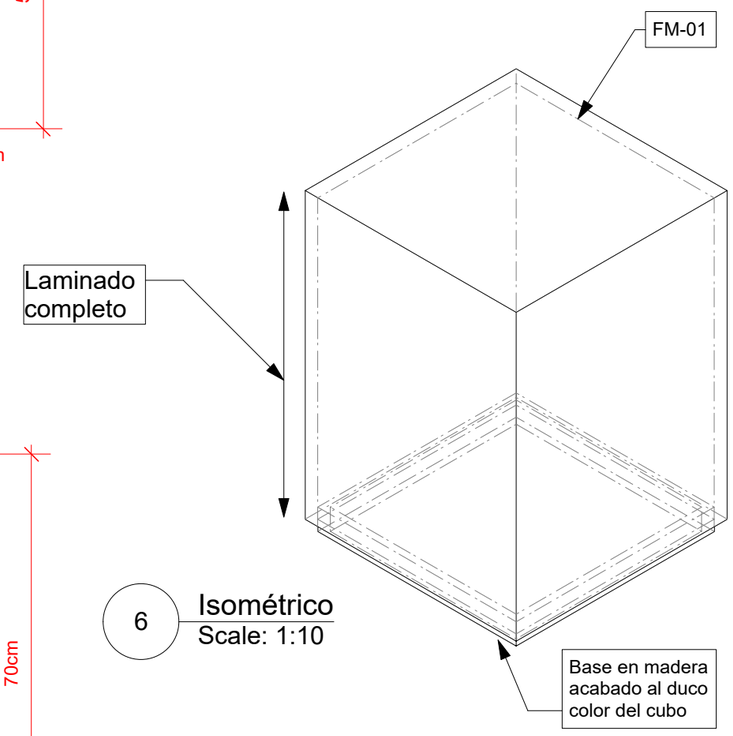

6 Isométrico
Scale: 1:10

NOTA: Cubos en 9 mm.

Actualizado: 30 de septiembre de 2015

No.	Date	Issue Notes	No.	Date	Revision Notes	Zone	Appr

Designed By: Blanca Castillo
Drawn By: Blanca Castillo
Checked By: MA
Reviewed By: Marcelo Albertal
Submitted By: BC
Project Manager: Marcelo Albertal
Date: 06/05/15
Revision: Revision
Project ID: MADI
Drawing Code: Drawing Code
CAD File Name: Muebles_Brissa
Plot Date: 00/00/00

Design Firm: MADI
Calle 88 #10-62 Bogota, DC, Colombia
3017867314
biancacastillog@gmail.com

Consultant: Marcelo Albertal design International

Project Title: Mobiliario BRISSA 2015

Sheet Title: BR-112 Cubo Medio Bajo
BR-113 Cubo Medio Medio

Scale: Ver escala de cada dibujo

Sheet No. 9 of 83

BR-114 Cubo Alto

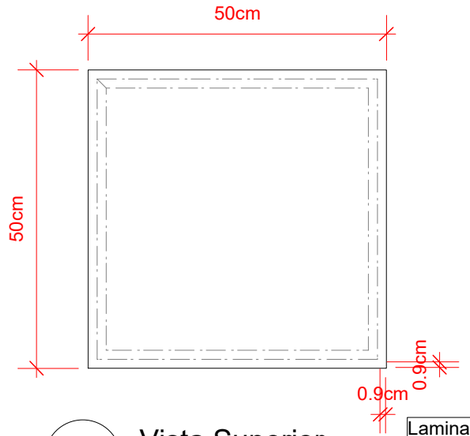

1 Vista Superior
Scale: 1:10

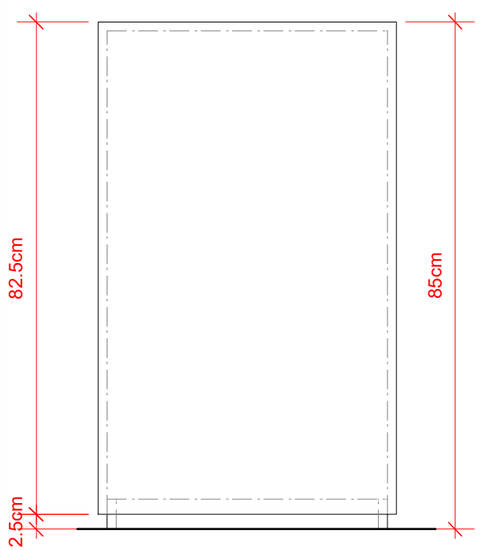

2 Vista Frontal
Scale: 1:10

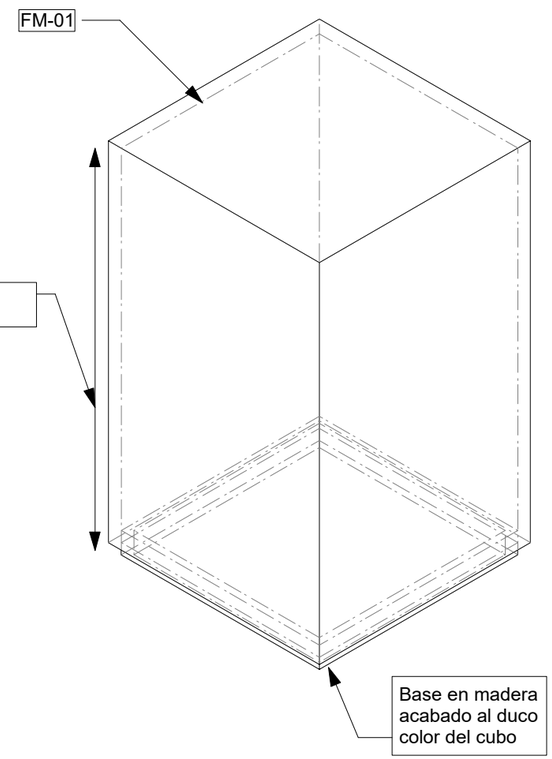

3 Isométrico
Scale: 1:10

NOTA: Cubos en 9 mm.

BR-115 Cubo Largo

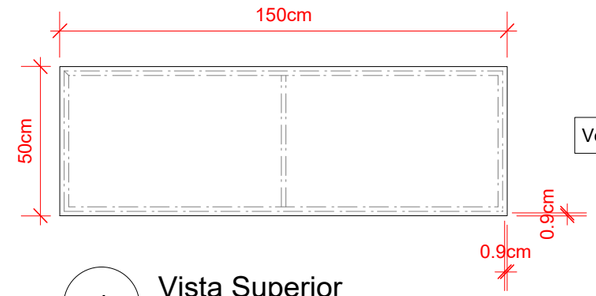

4 Vista Superior
Scale: 1:20

5 Vista Frontal
Scale: 1:20

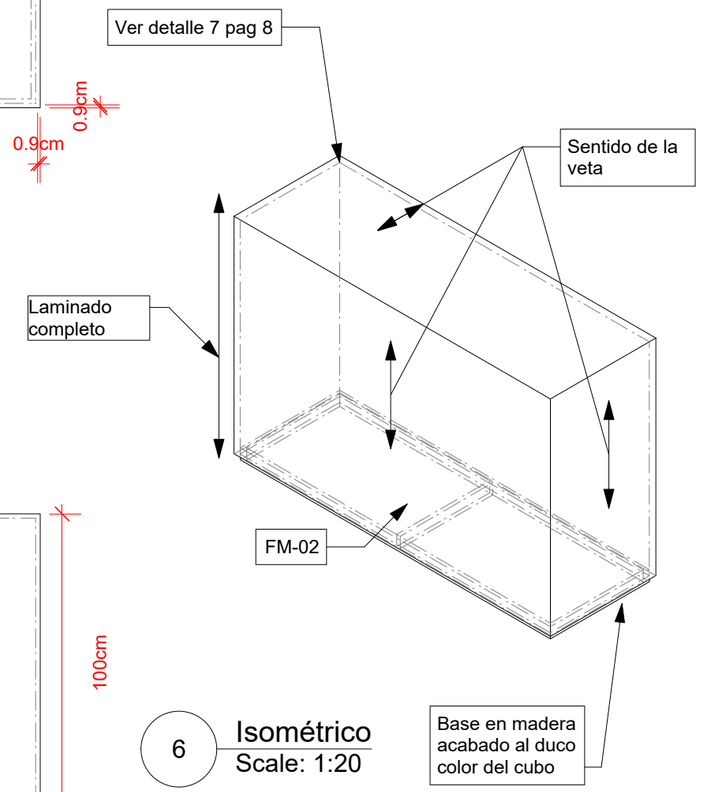

6 Isométrico
Scale: 1:20

NOTA: Cubos en 9 mm. En caso de no contar con la formica se hace econ referencia Tablemac.

Actualizado: 30 de septiembre de 2015

Designed By	Bianca Castillo
Drawn By	Bianca Castillo
Checked By	MA
Reviewed By	Marcelo Albertal
Submitted By	BC
Project Manager	Marcelo Albertal
Date	06/05/15
Revision	Revisión
Project ID	MADI
Drawing Code	Drawing Code
CAD File Name	Muebles_Brissa
PAGE Code	00/00/00

Design Firm: MADI
Calle 88 #10-62 Bogota, DC, Colombia
3017867314
biancacastillog@gmail.com

Consultant: Marcelo Albertal design International

Project Title: Mobiliario BRISSA 2015

Sheet Title: BR-114 Cubo Alto
BR-115 Cubo Largo

Scale: Ver escala de cada dibujo

Sheet No. 10 of 83

No.	Issue Notes	Date	No.	Revision Notes	Date	Zone	Appr

BR-116 Mesa de Noche

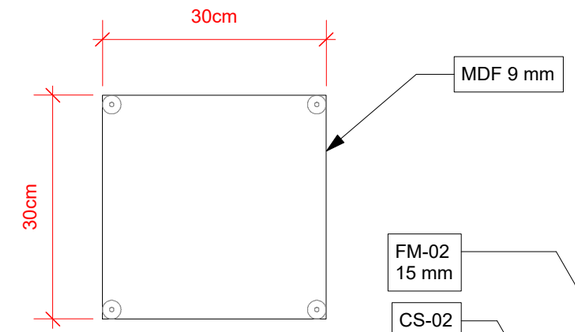

1 Vista Superior
Scale: 1:8

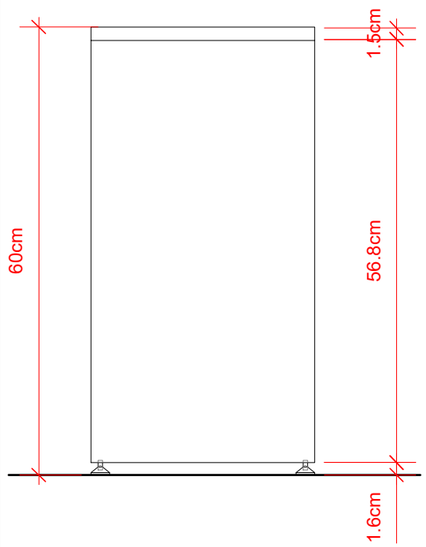

2 Vista Frontal
Scale: 1:8

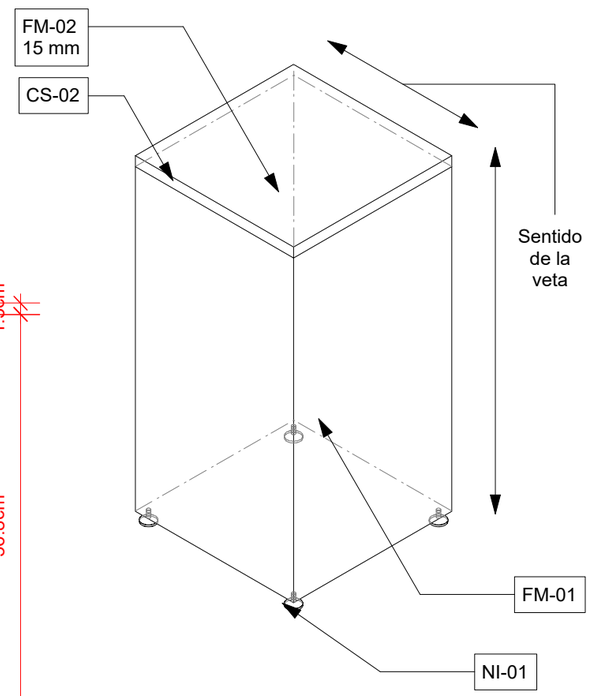

3 Isométrico
Scale: 1:8

NOTA: Cubos en 9 mm.

BR-117 Cubo alto abierto

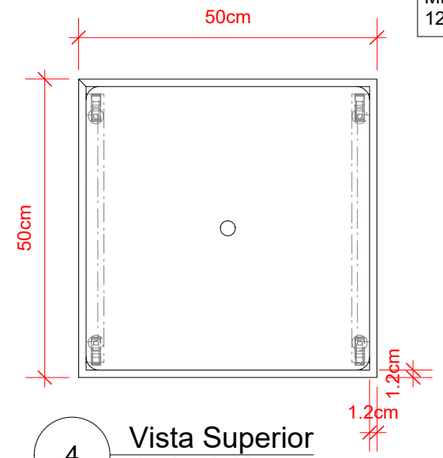

4 Vista Superior
Scale: 1:10

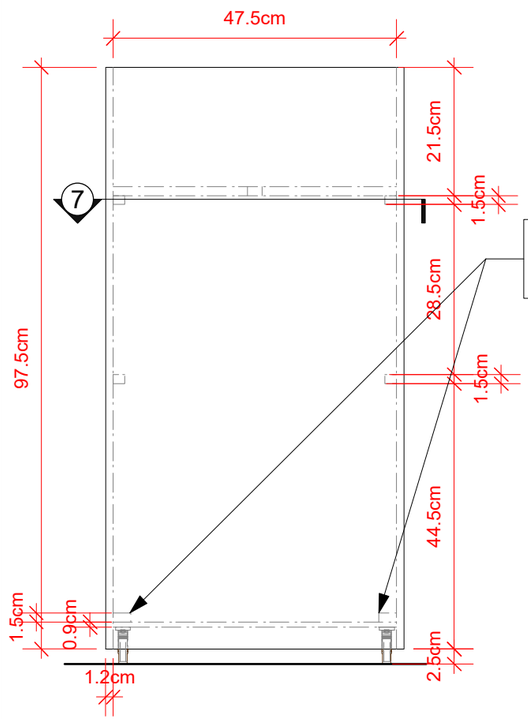

5 Vista Frontal
Scale: 1:10

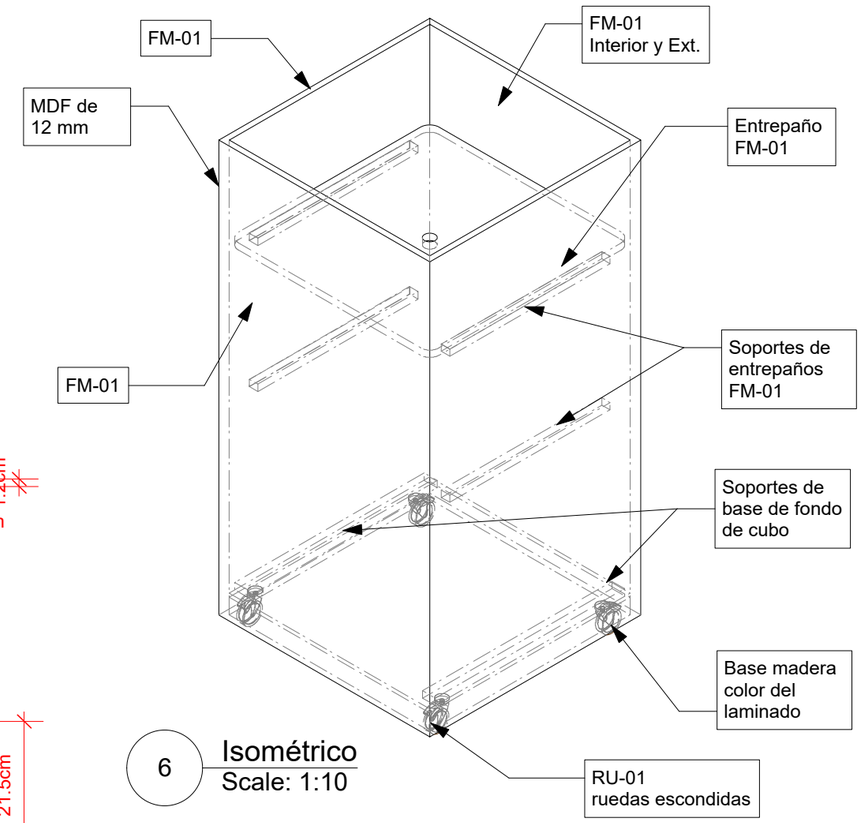

6 Isométrico
Scale: 1:10

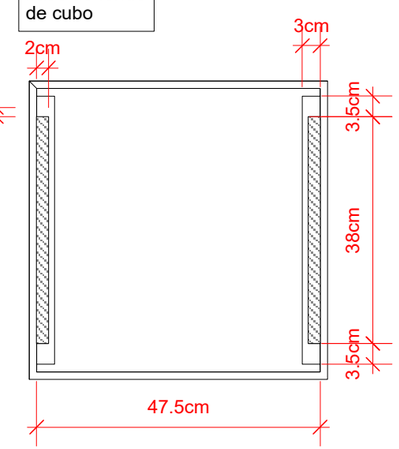

7 Corte Fondo Falso
Scale: 1:10

NOTA: Cubos en 12 mm.

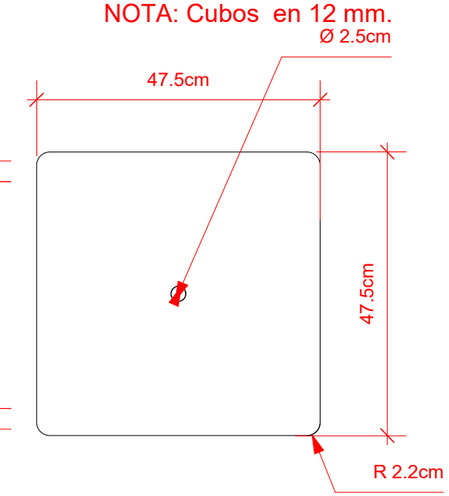

8 V. Superior Entrepaño
Scale: 1:10

Actualizado: 30 de septiembre de 2015

No.	Date	Issue Notes	Revision Notes	Date	No.	Zone	Appr

Date	06/05/15
Revision	Revision
Project ID	MADI
Drawing Code	Drawing Code
CAD File Name	Muebles_Brissa
Project Date	00/00/00
Designed By	Bianca Castillo
Drawn By	Bianca Castillo
Checked By	MA
Reviewed By	Marcelo Albertal
Submitted By	BC
Project Manager	Marcelo Albertal

Design Firm: MADI
Calle 88 #10-62 Bogota, DC, Colombia
3017867314
biancacastilloq@gmail.com

Consultant: Marcelo Albertal design international

Project Title: Mobiliario BRISSA 2015

Sheet Title: BR-116 Mesa de Noche
BR-117 Cubo alto abierto

Scale: Ver escala de cada dibujo

Sheet No. 11 of 83

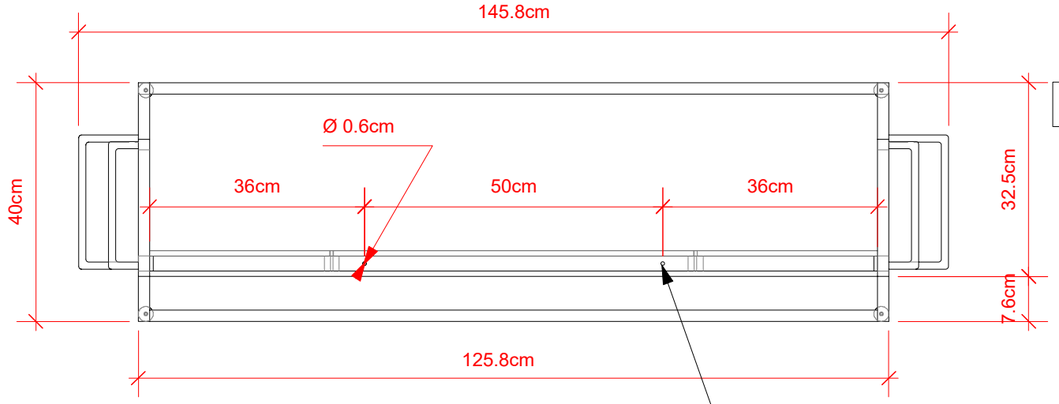

1 Vista Superior
Scale: 1:10

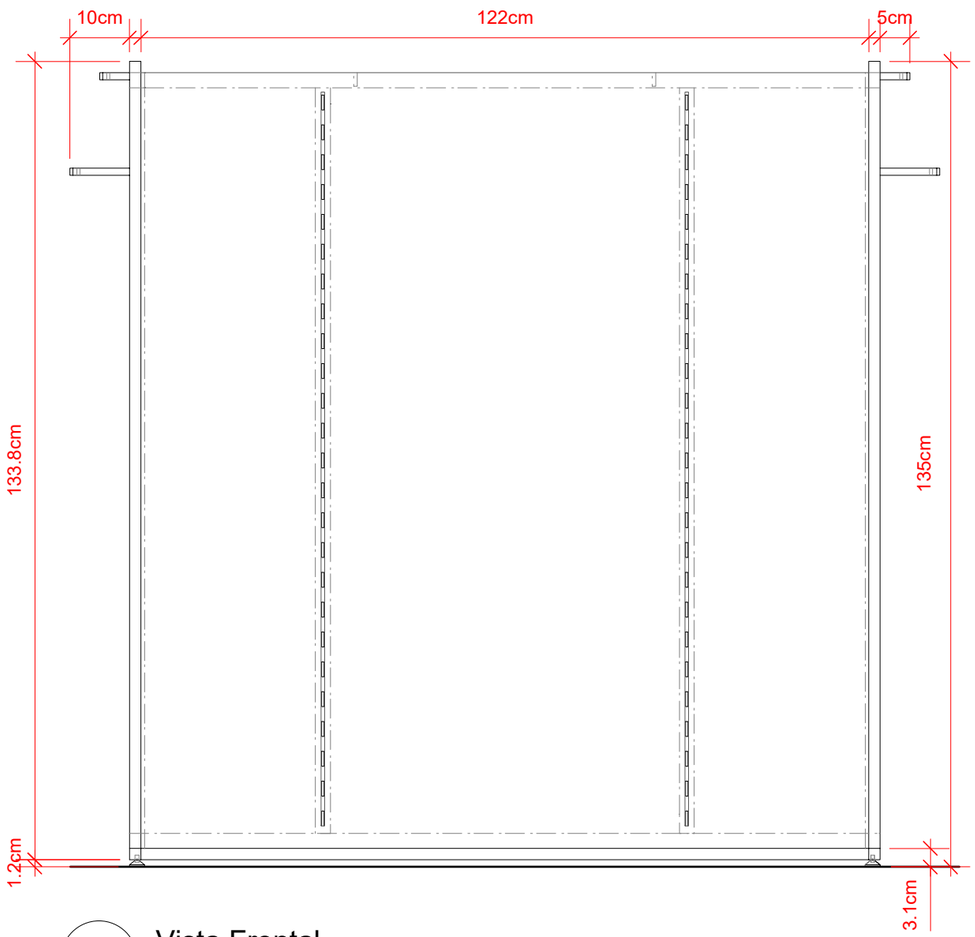

2 Vista Frontal
Scale: 1:10

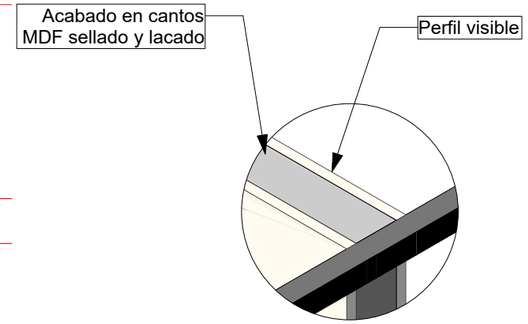

3 Detalle Panel-Estructura
Scale 1:2

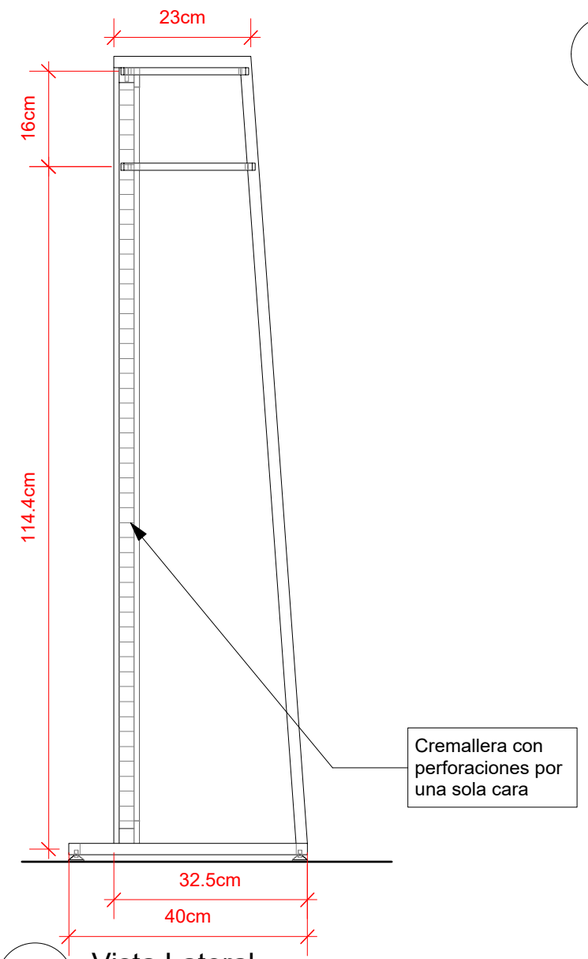

4 Vista Lateral
Scale: 1:10

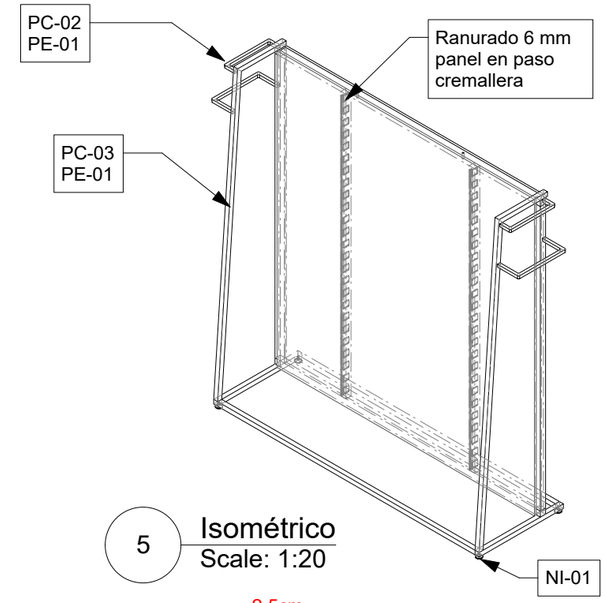

5 Isométrico
Scale: 1:20

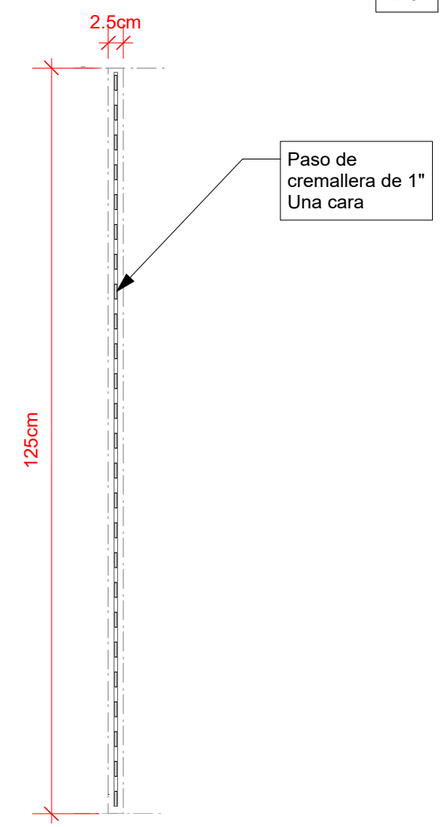

6 Cremallera
Scale: 1:10

Herrajes Br-142, Br-143 y Br-145 con brazos

Actualizado: 30 de septiembre de 2015

No.	Date	Issue Notes	No.	Date	Revision Notes	Zone	Appr

Date	06/05/15
Revision	Revisión
Project ID	MADI
Drawing Code	Drawing Code
CAD File Name	Muebles_Brissa
Plot Date	00/00/00
Designed By	Blanca Castillo
Drawn By	Blanca Castillo
Checked By	MA
Reviewed By	Marcelo Albertal
Submitted By	BC
Project Manager	Marcelo Albertal

Design Firm
MADI
Calle 88 #10-62 Bogota, DC, Colombia
3017867314
biancacastilloq@gmail.com

Consultant
Marcelo Albertal design International

Project Title
Mobiliario BRISSA
2015

Sheet Title
BR-121 Media Góndola

Scale
Ver escala de cada dibujo

Sheet No.
14
of
83

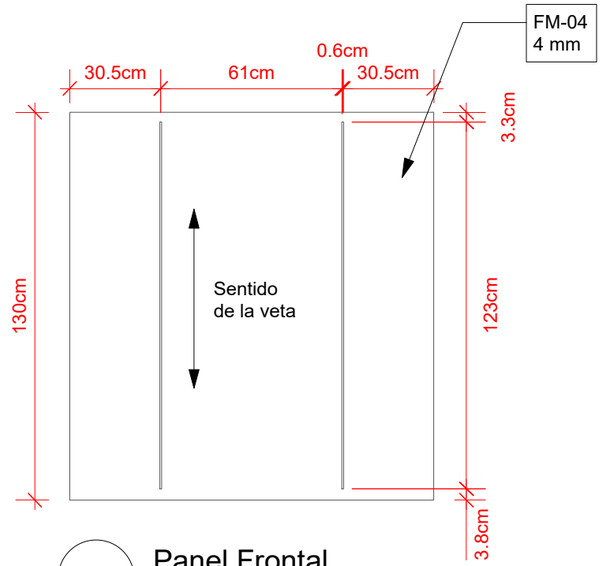

1 Panel Frontal
Scale: 1:20

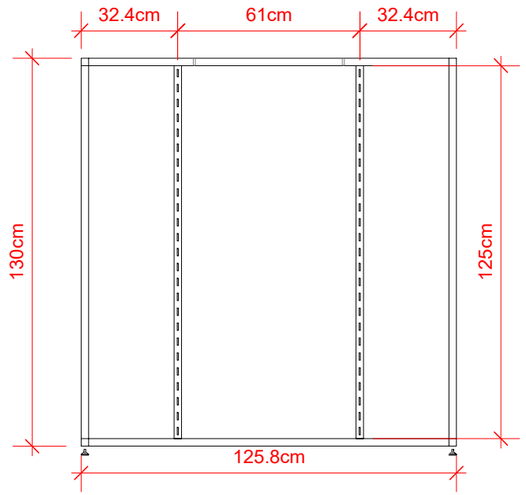

3 Estructura Cremallera
Scale: 1:20

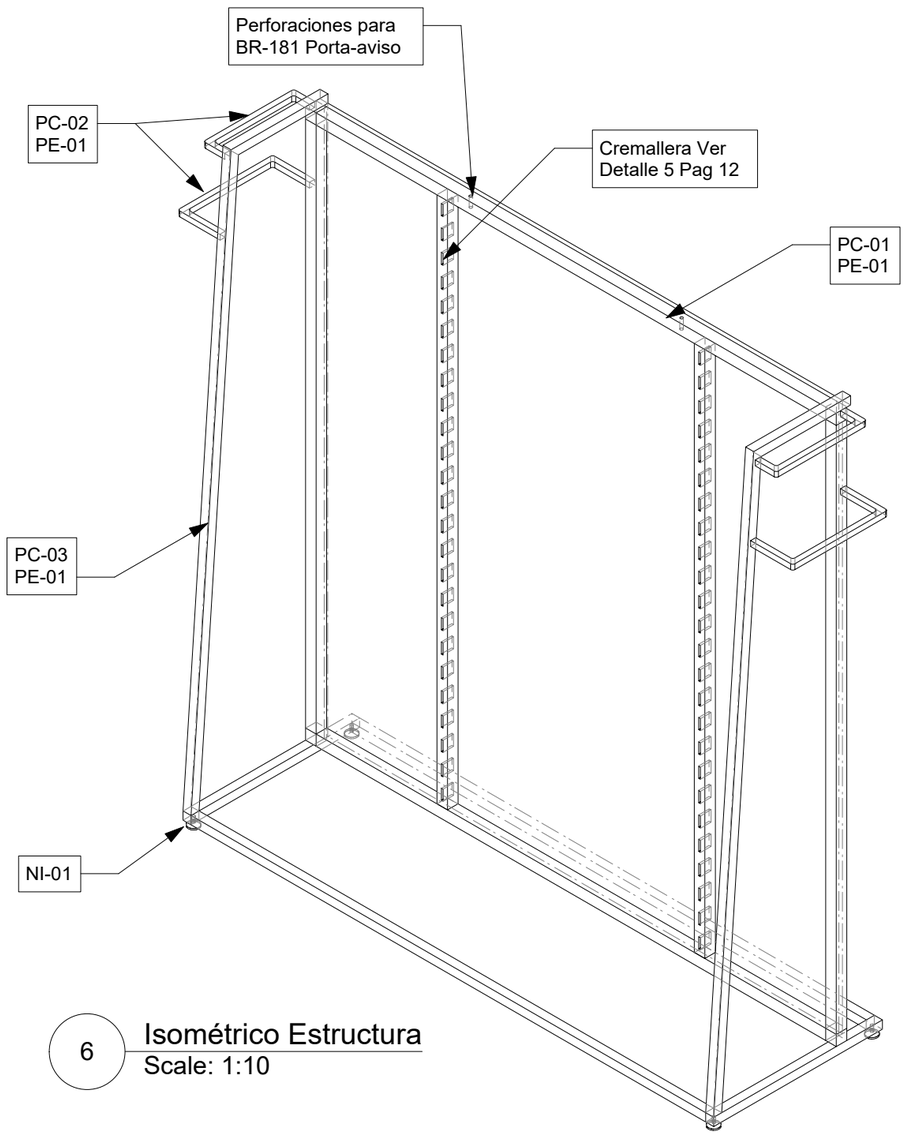

6 Isométrico Estructura
Scale: 1:10

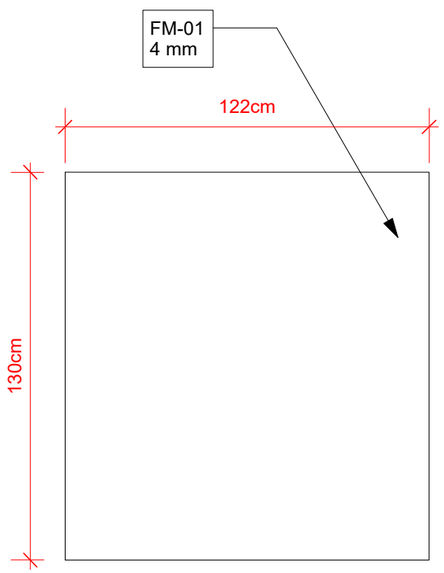

2 Panel Posterior
Scale: 1:20

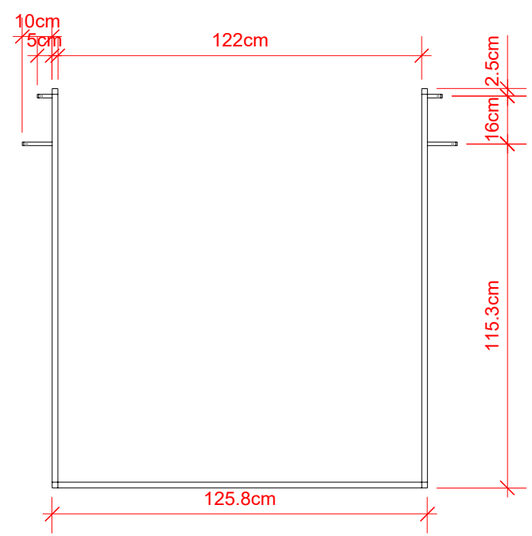

4 Vista Frontal Estructura
Scale: 1:20

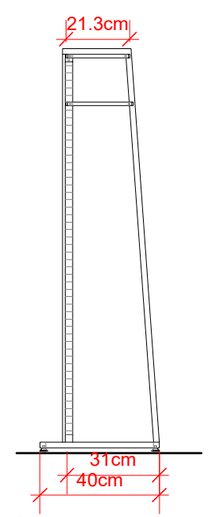

5 Vista Lateral
Scale: 1:20

Actualizado:1 de octubre de 2015

Designed By: Bianca Castillo	Date: 06/05/15		
Drawn By: Bianca Castillo	Revision: Revision		
Checked By: MA	Project ID: MADI		
Reviewed By: Marcelo Albertal	Drawing Code: Drawing Code		
Submitted By: BC	CAD File Name: Muebles_Brissa		
Project Manager: Marcelo Albertal	Revision: 00/00/00		

Design Firm: MADI
Calle 88 #10-62 Bogota, DC, Colombia
3017867314
biancacastillog@gmail.com

Consultant: Marcelo Albertal design International

Project Title: Mobiliario BRISSA 2015

Sheet Title: BR-121 Media Góndola Estructura metálica Panel de Madera

Scale: Ver escala de cada dibujo

Sheet No. 15 of 83

No.	Date	Issue Notes	No.	Date	Revision Notes	Zone	Appr

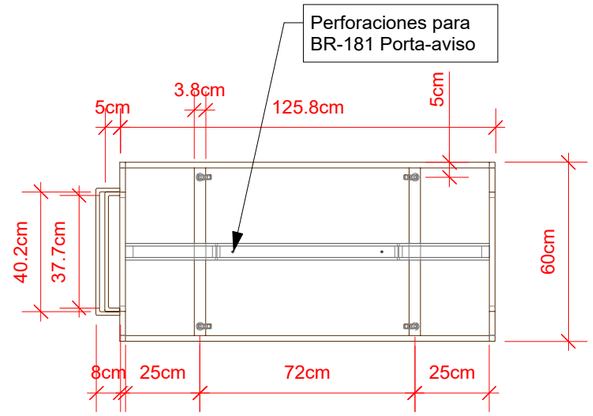

1 Vista Superior
Scale: 1:20

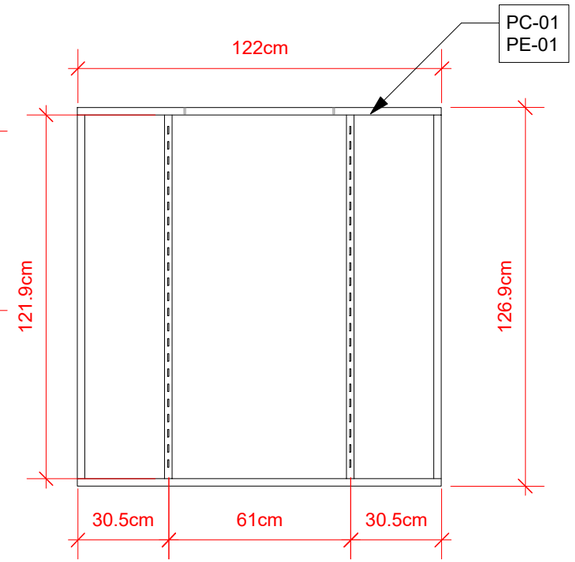

3 Estructura Panel Cremallera
Scale: 1:20

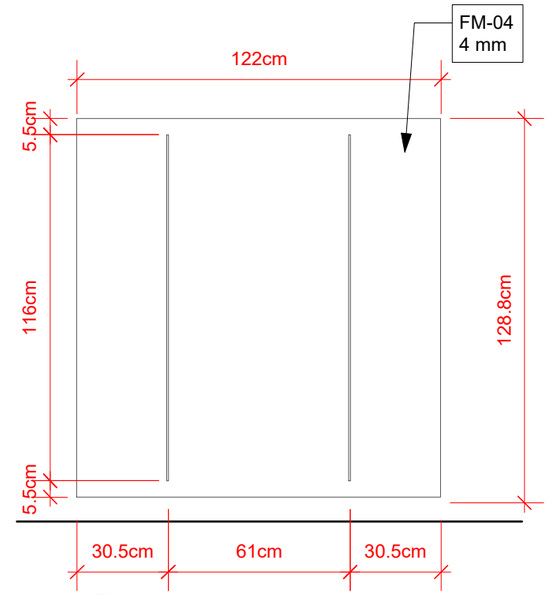

5 Panel
Scale: 1:20

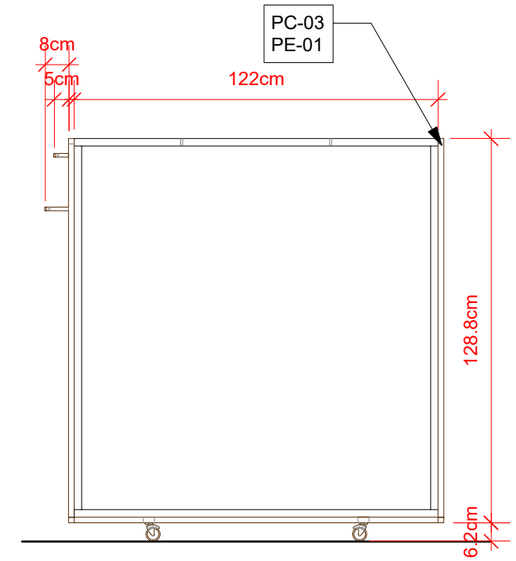

7 Estructura general
Scale: 1:20

Actualizado: 30 de septiembre de 2015

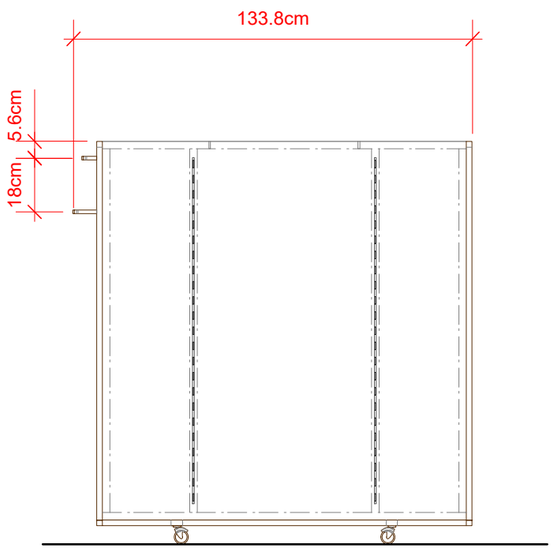

2 Vista Frontal
Scale: 1:20

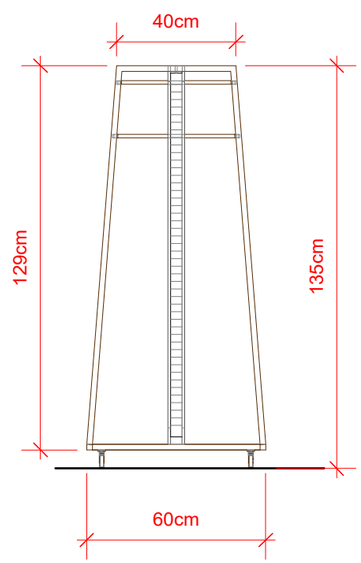

4 Vista Lateral
Scale: 1:20

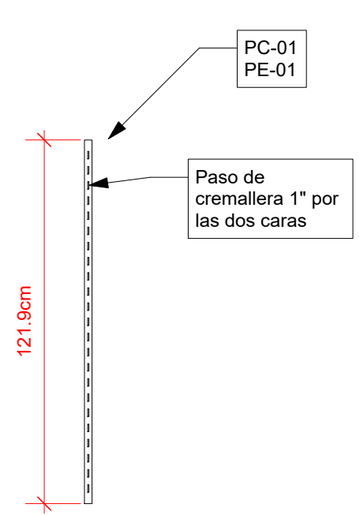

6 Cremallera
Scale: 1:20

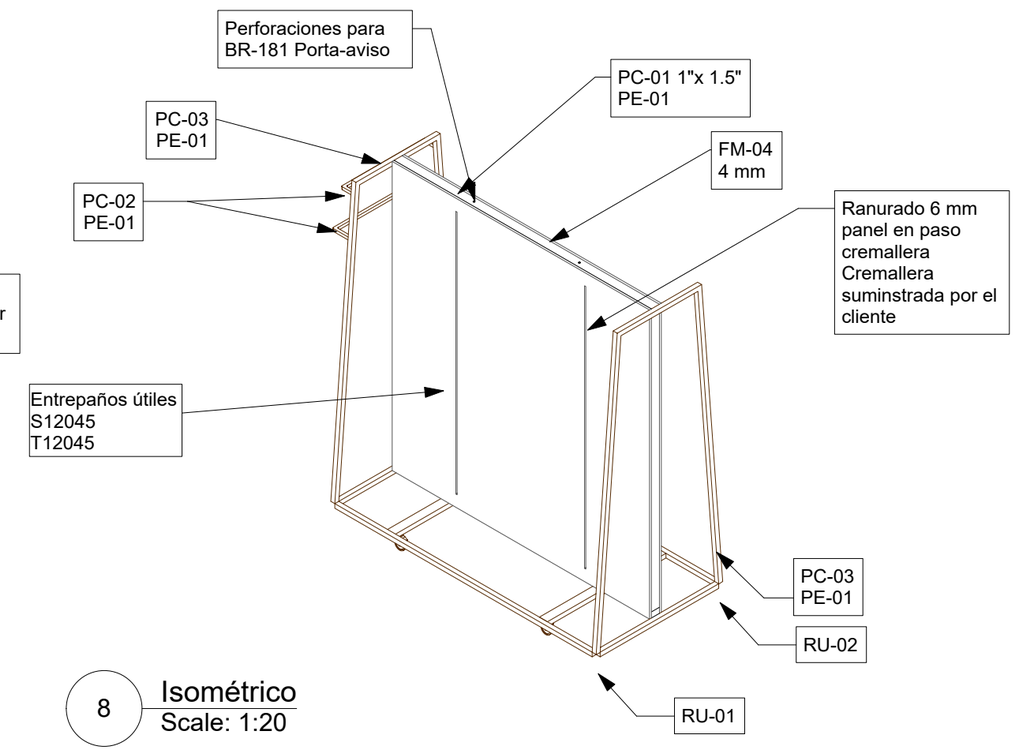

8 Isométrico
Scale: 1:20

No.	Date	Issue Notes	Revision Notes	Zone	Appr

Date	06/05/15
Revision	Revisión
Project ID	MADI
Drawing Code	Drawing Code
CAD File Name	Muebles_Brissa
Revision	00/00/00
Designed By	Bianca Castillo
Drawn By	Bianca Castillo
Checked By	MA
Reviewed By	Marcelo Albertal
Submitted By	BC
Project Manager	Marcelo Albertal

Design Firm
MADI
Calle 88 #10-62 Bogota, DC, Colombia
3017867314
biancacastillog@gmail.com

Consultant
Marcelo Albertal design international

Project Title
Mobiliario BRISSA
2015

Sheet Title
BR-122 Góndola3

Scale
Ver escala de cada dibujo

Sheet No.
16
of
83

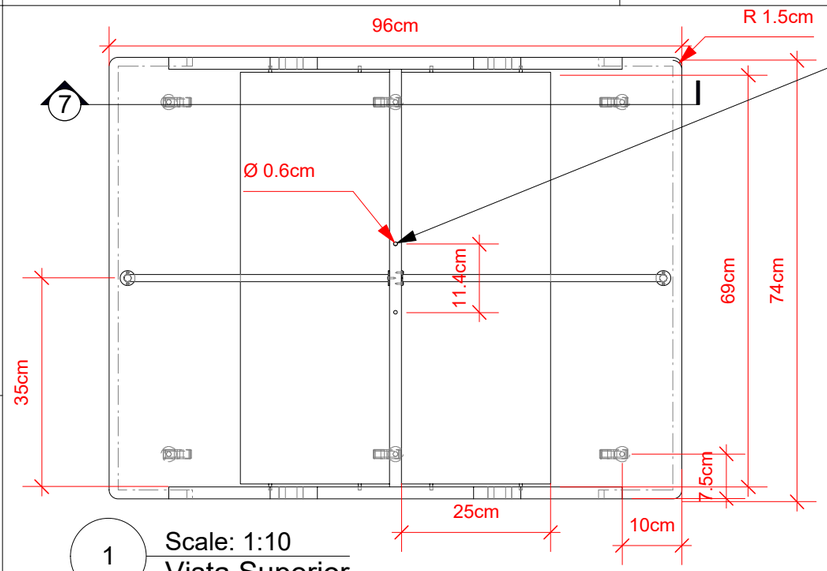

1 Scale: 1:10
Vista Superior

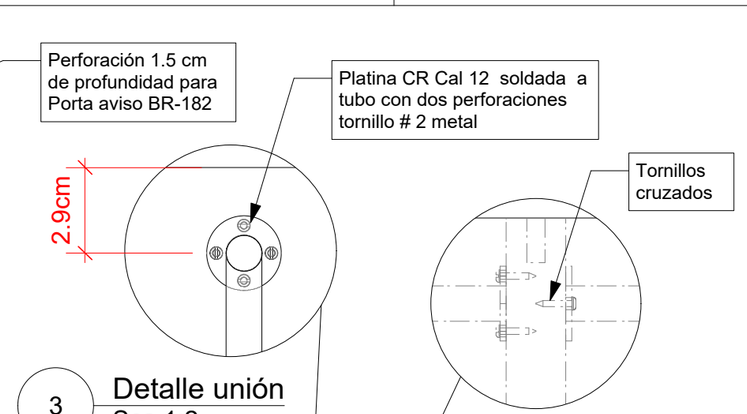

3 Detalle unión
Sca 1:2

5 Ubicación tornillos
Scale 1:2

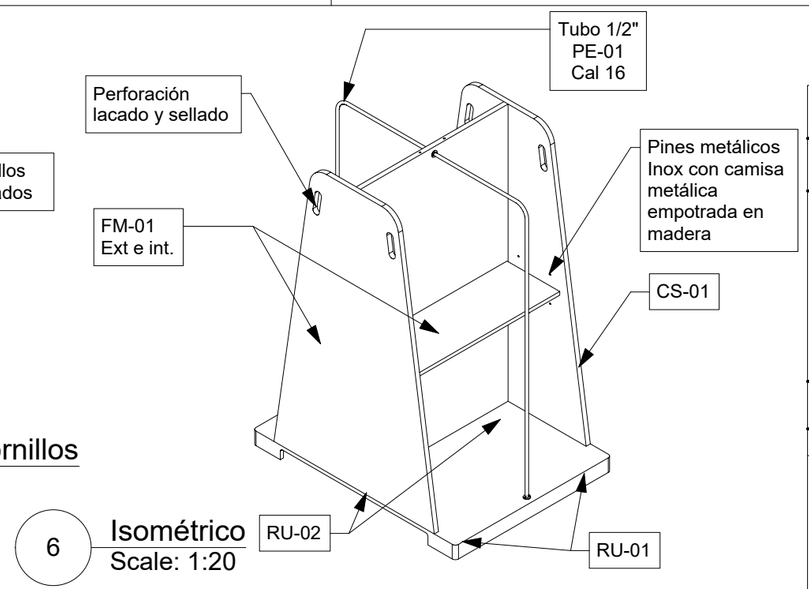

6 Isométrico
Scale: 1:20

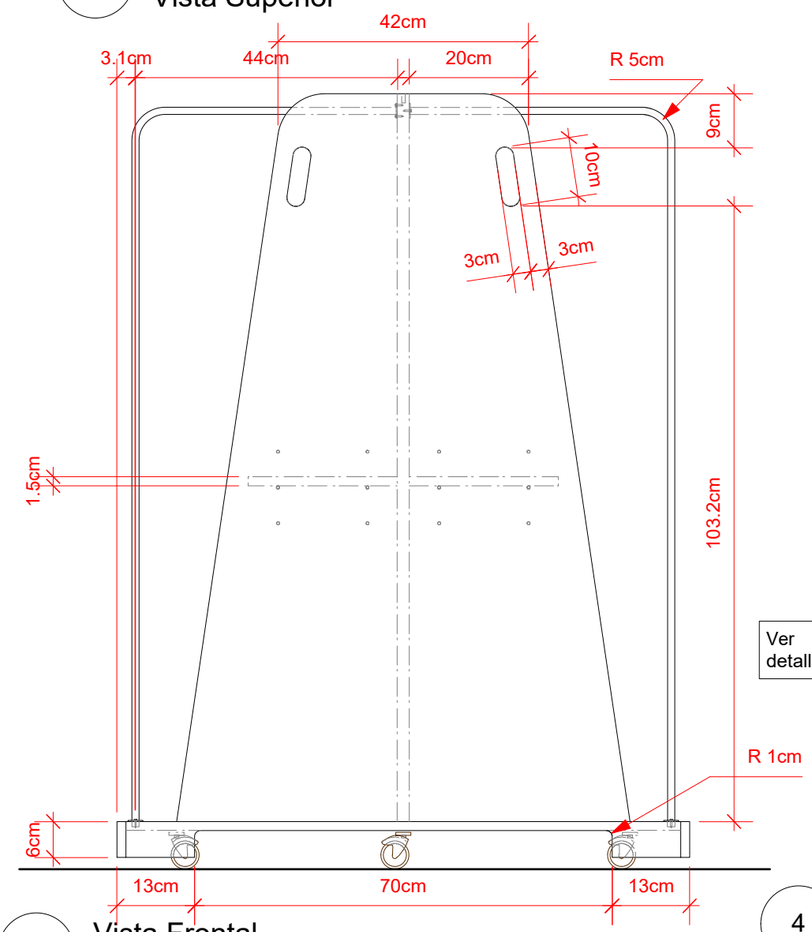

2 Vista Frontal
Scale: 1:10

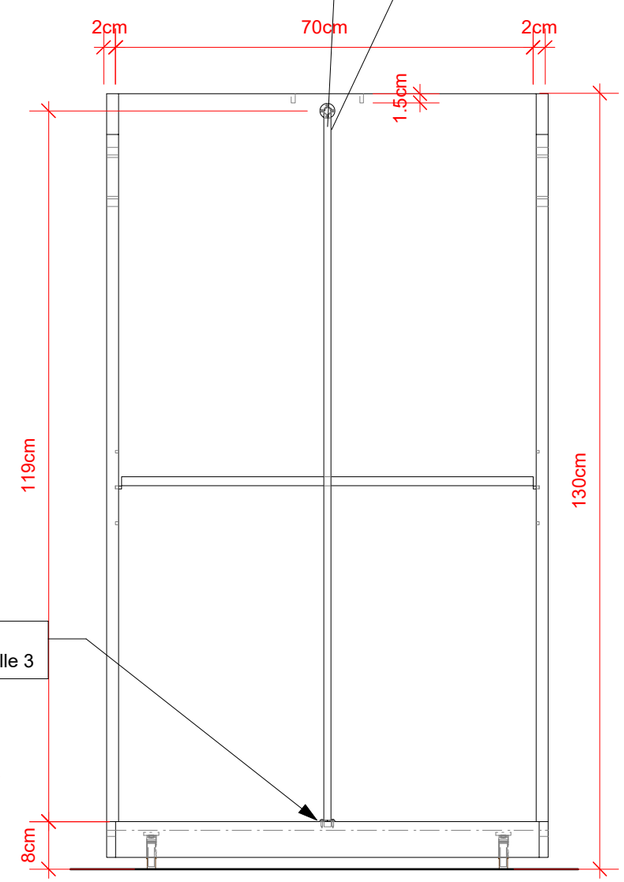

4 Vista Lateral
Scale: 1:10

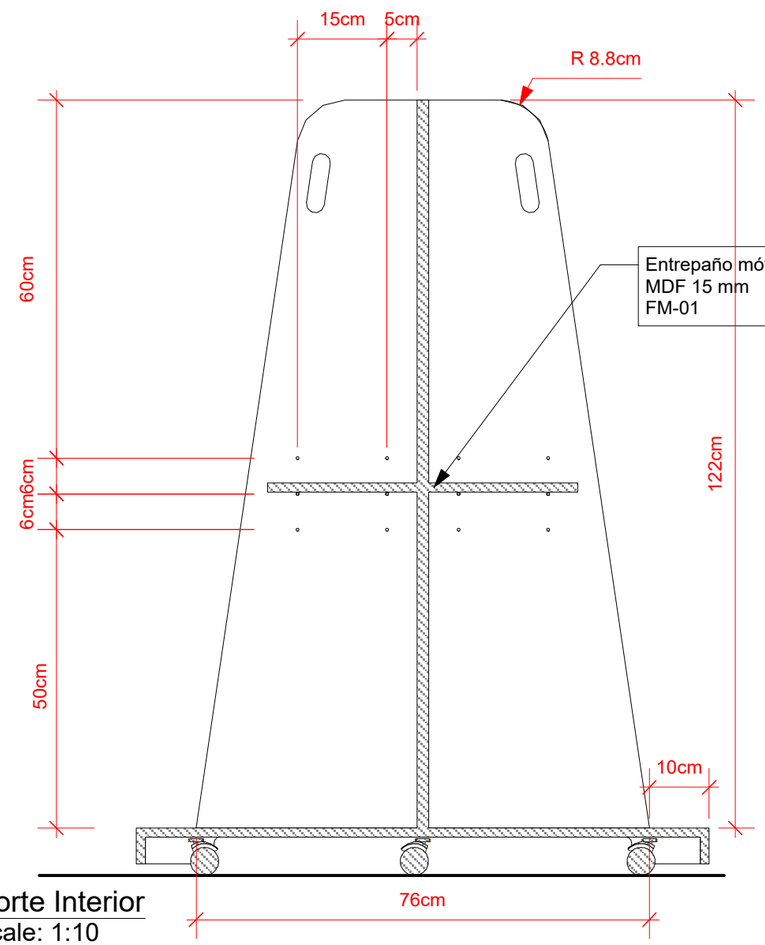

7 Corte Interior
Scale: 1:10

Actualizado: 30 de septiembre de 2015

Designed By	Blanca Castillo	Date	06/05/15	Apprv	
Drawn By	Blanca Castillo	Revision	Revision	Zone	
Checked By	MA	Project ID	MADI	Revision Notes	
Reviewed By	Marcelo Albertal	Drawing Code	Drawing Code	Date	
Submitted By	BC	CAD File Name	Muebles_Brissa	No.	
Project Manager	Marcelo Albertal	Rev Date	00/00/00	Issue Notes	
				Date	
				No.	

Design Firm: MADI
Calle 88 #10-62 Bogota, DC, Colombia
3017867314
biancacastillog@gmail.com
Consultant: Marcelo Albertal design International

Project Title: Mobiliario BRISSA 2015
Sheet Title: BR-123 Porta-Almohadas
Scale: Ver escala de cada dibujo
Sheet No. 17 of 83

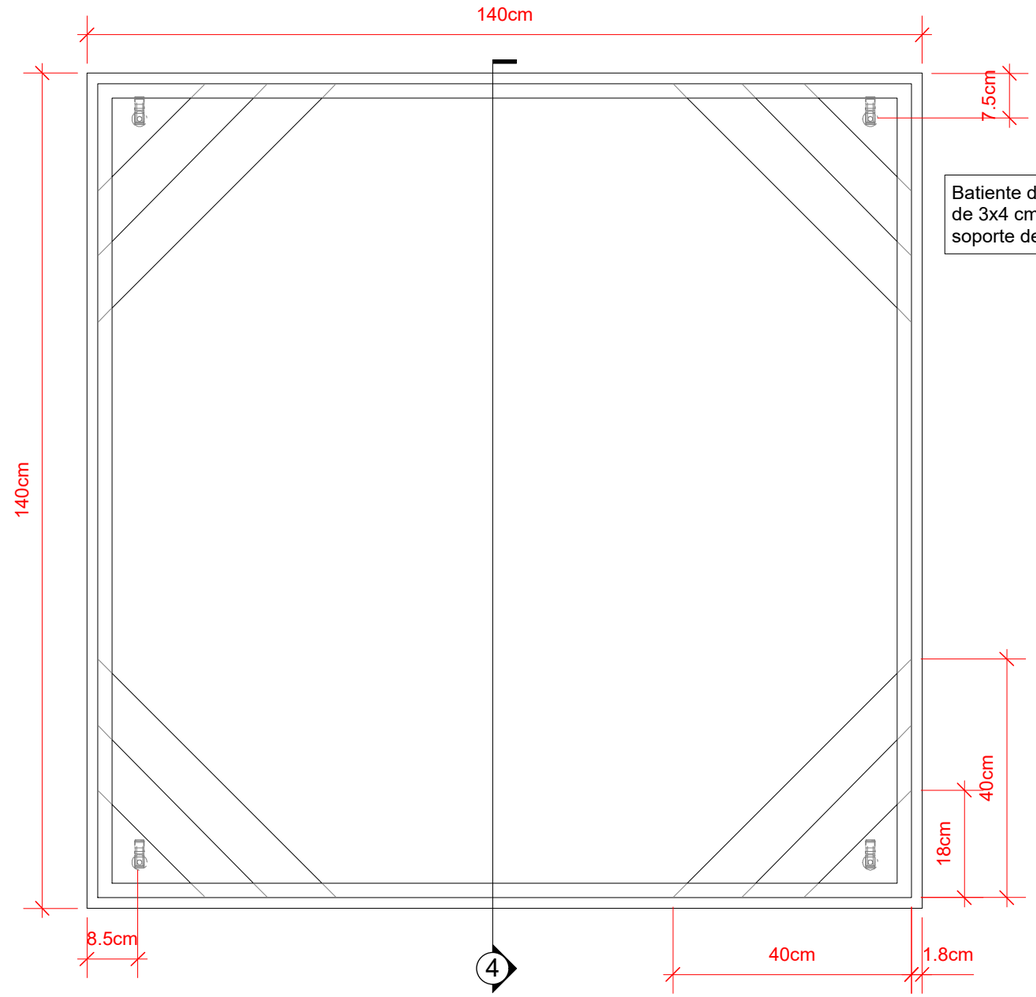

1 Vista Superior
Scale: 1:10

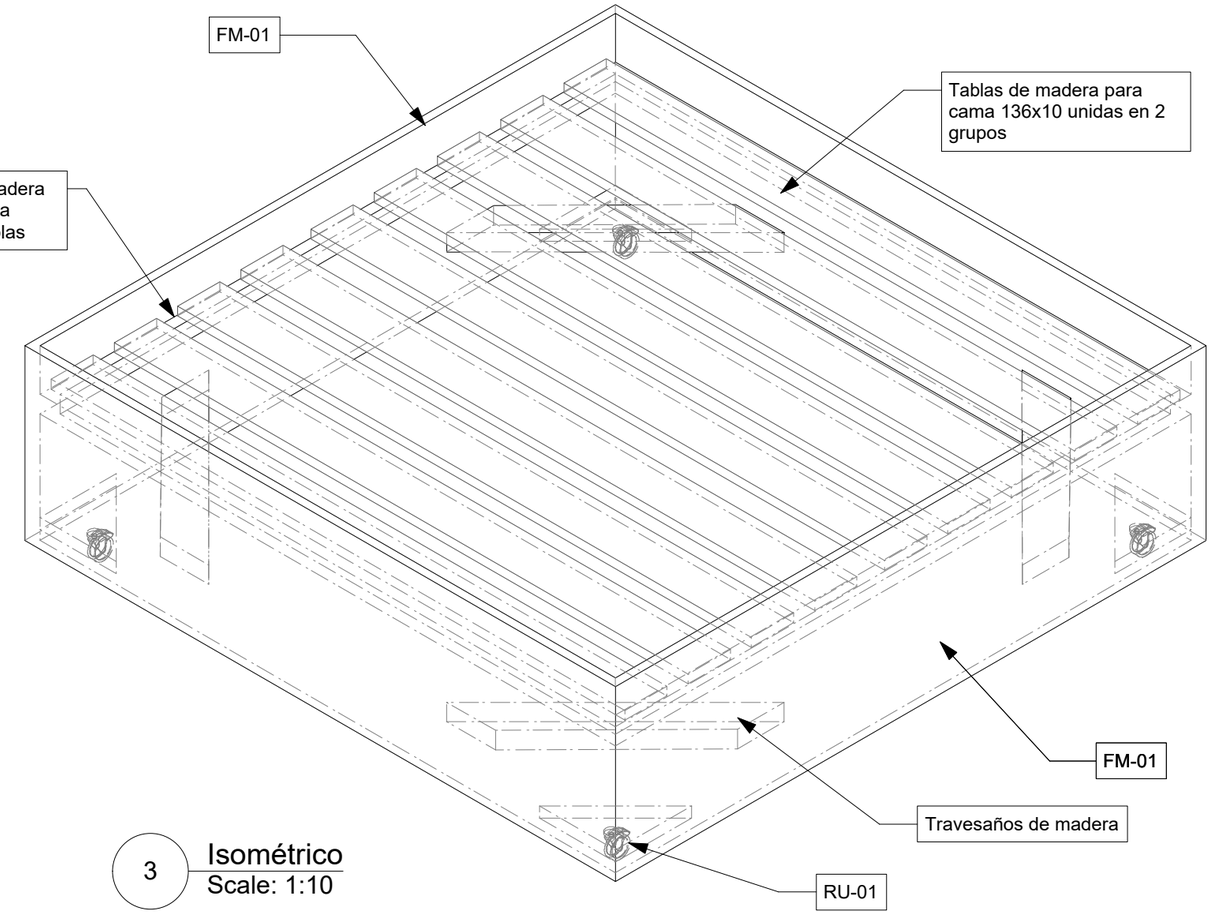

3 Isométrico
Scale: 1:10

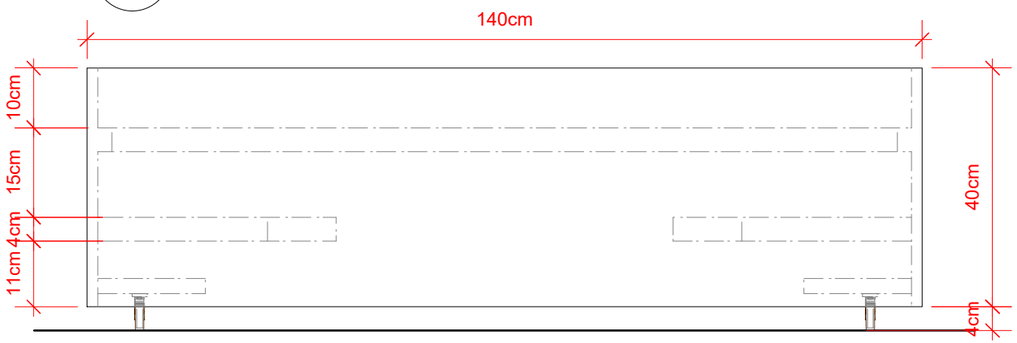

2 Vista Frontal
Scale: 1:10

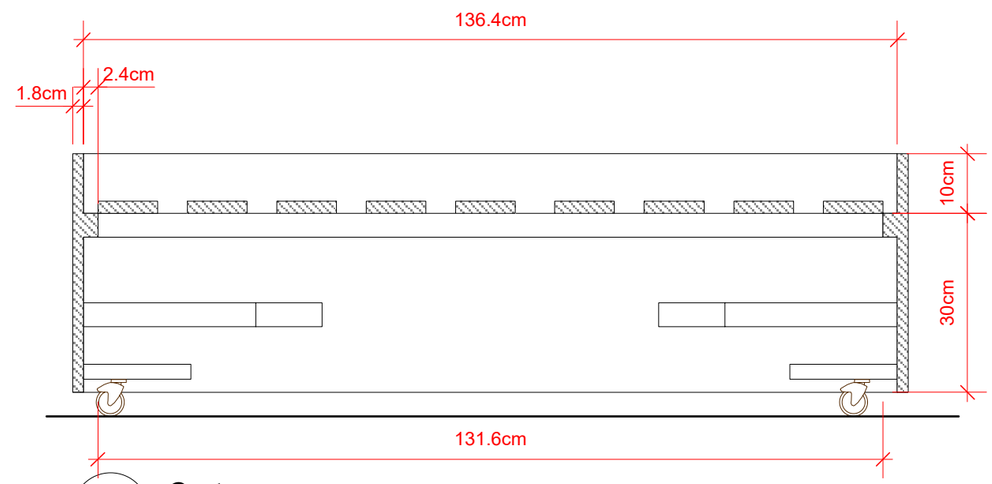

4 Corte
Scale: 1:10

Actualizado: 19 de agosto de 2015

No.	Date	Issue Notes	No.	Date	Revision Notes	Zone	Appr

Designed By: Blanca Castillo
Drawn By: Blanca Castillo
Checked By: MA
Reviewed By: Marcelo Albertal
Submitted By: BC
Project Manager: Marcelo Albertal

Date: 06/05/15
Revision: Revision
Project ID: MADI
Drawing Code: Drawing Code
CAD File Name: Muebles_Brissa
Plot Date: 00/00/00

Design Firm: MADI
Calle 88 #10-62 Bogota, DC, Colombia
3017867314
biancacastillog@gmail.com

Consultant: Marcelo Albertal design International

Project Title: Mobiliario BRISSA 2015

Sheet Title: BR-125 Cama Piso Comercial

Scale: Ver escala de cada dibujo

Sheet No.
18
of
83

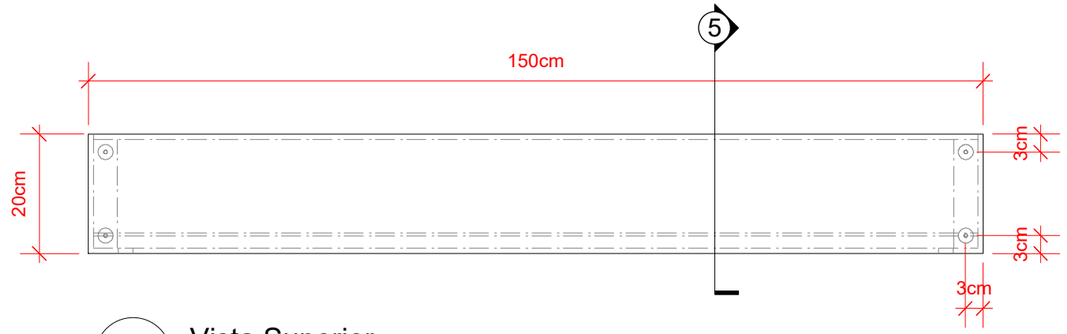

1 Vista Superior
Scale: 1:10

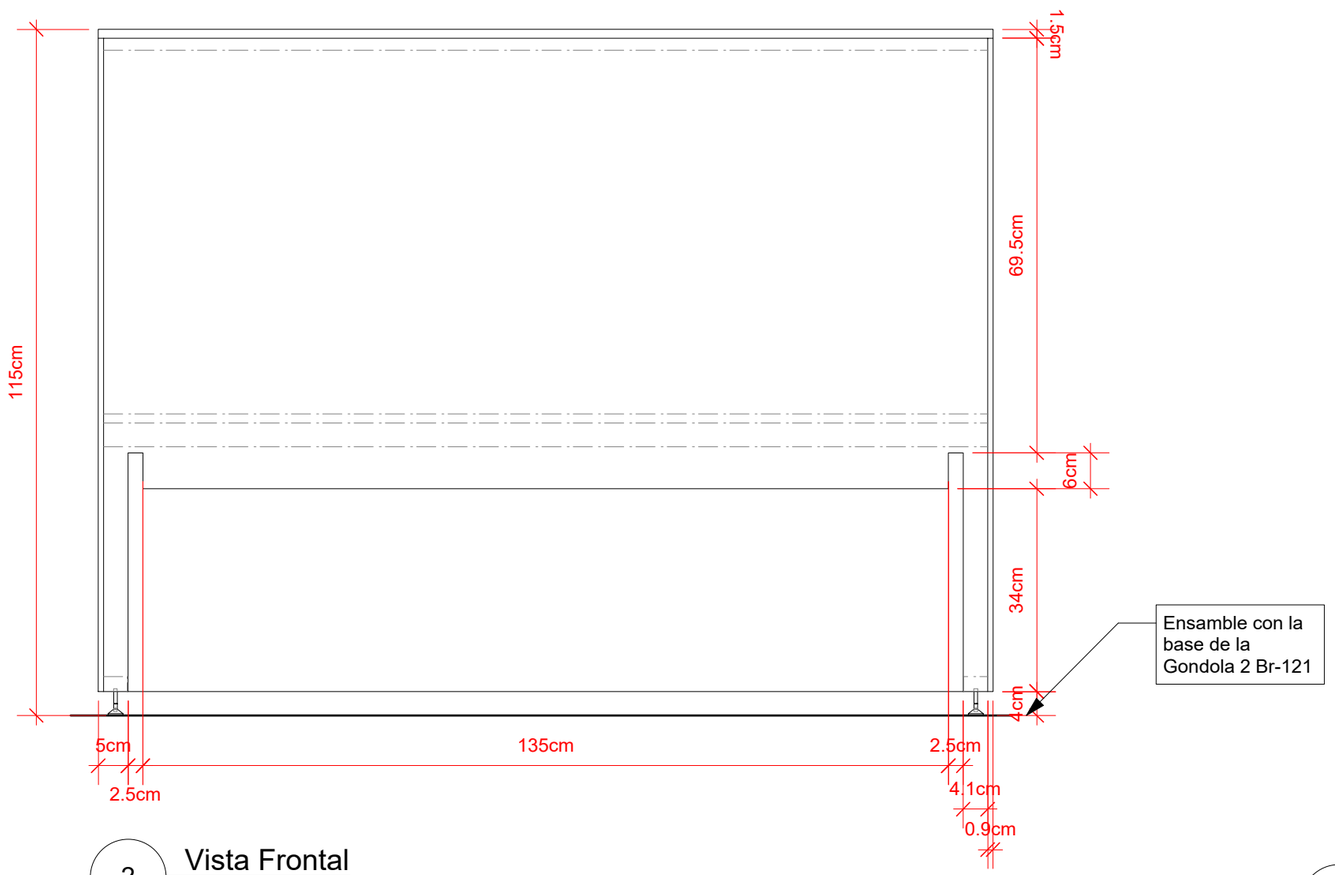

2 Vista Frontal
Scale: 1:10

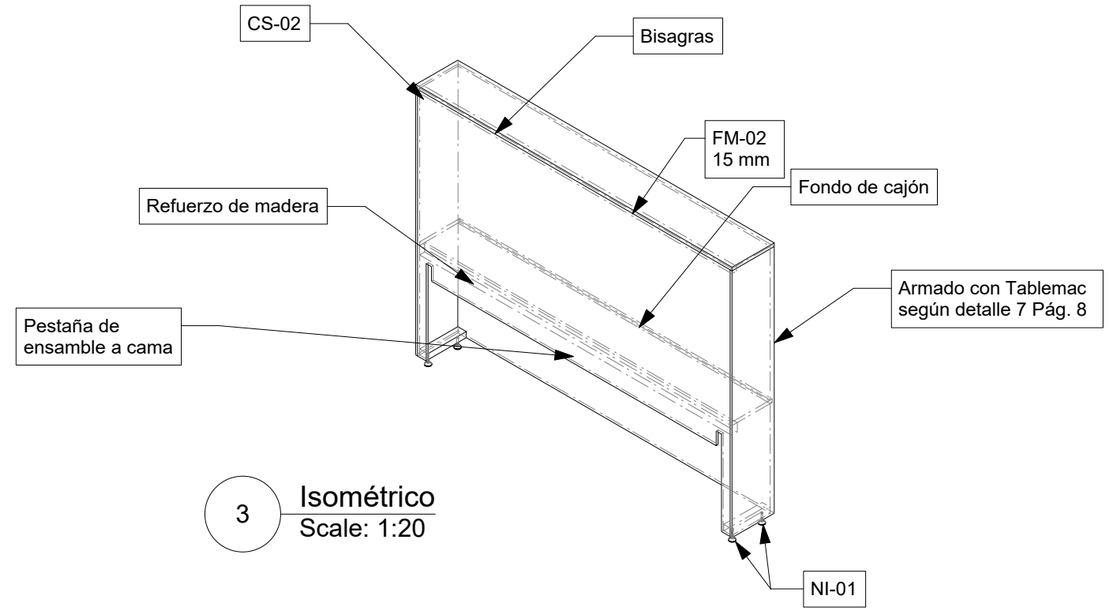

3 Isométrico
Scale: 1:20

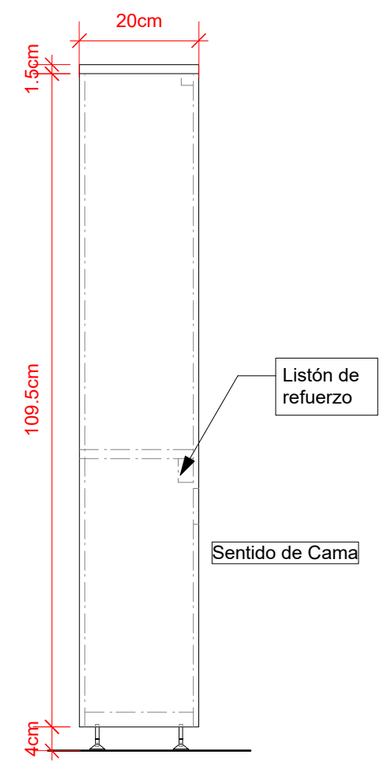

4 Vista Lateral
Scale: 1:10

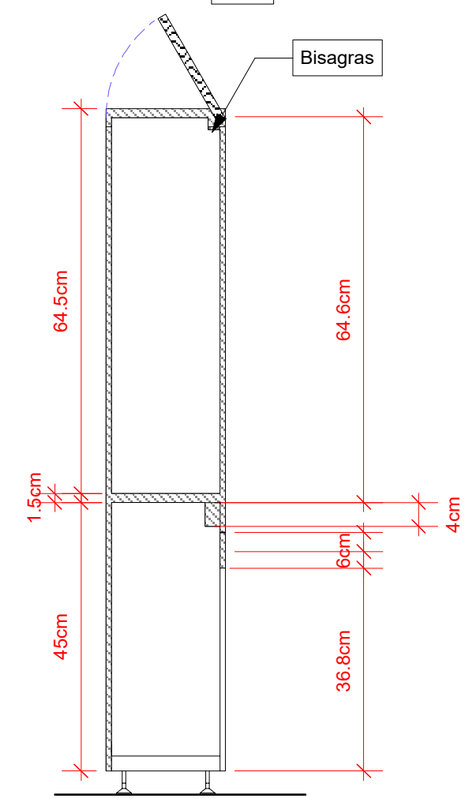

5 Corte
Scale: 1:10

Actualizado: 30 de septiembre de 2015

No.	Date	Issue Notes	Revision Notes	Zone	Appr

Designed By: Blanca Castillo
Date: 06/05/15
Drawn By: Blanca Castillo
Revision: Revision
Checked By: MA
Project ID: MADI
Reviewed By: Marcelo Albertal
Drawing Code: Drawing Code
Submitted By: BC
CAD File Name: Muebles_Brissa
Project Manager: Marcelo Albertal
Rev.Date: 00/00/00

Design Firm: MADI
Calle 88 #10-62 Bogota, DC, Colombia
3017867314
biancacastillog@gmail.com

Consultant: Marcelo Albertal design International

Project Title: Mobiliario BRISSA 2015

Sheet Title: BR-126 Espaldar Cama

Scale: Ver escala de cada dibujo

Sheet No. 19 of 83

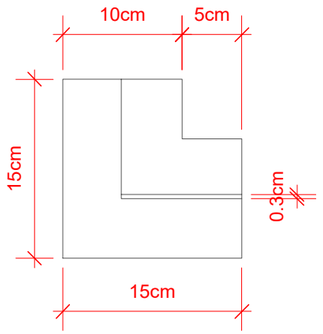

1 Vista Superior
Scale: 1:5

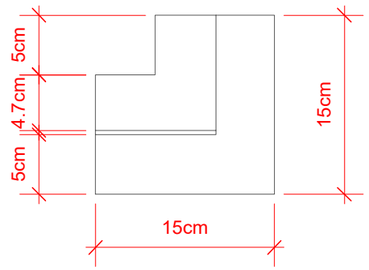

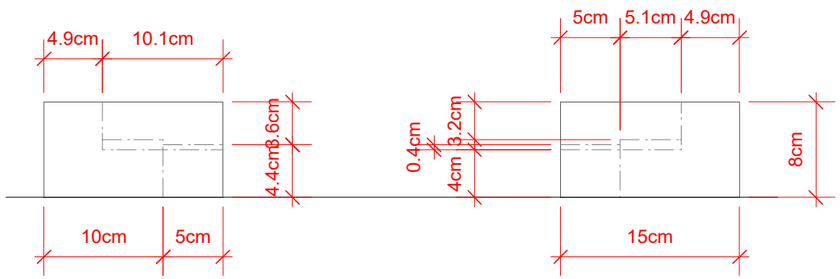

2 Vista Frontal
Scale: 1:5

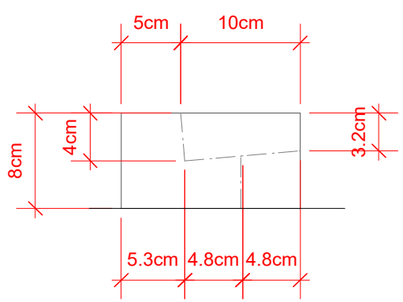

3 Vista Lateral
Scale: 1:5

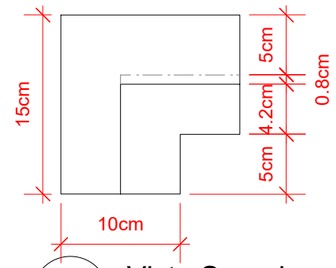

4 Vista Superior
Scale: 1:5

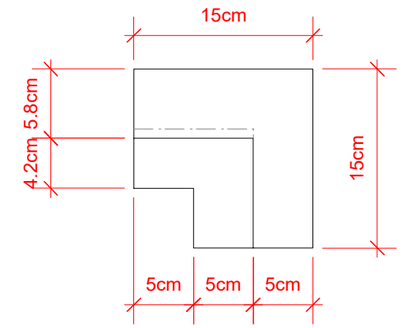

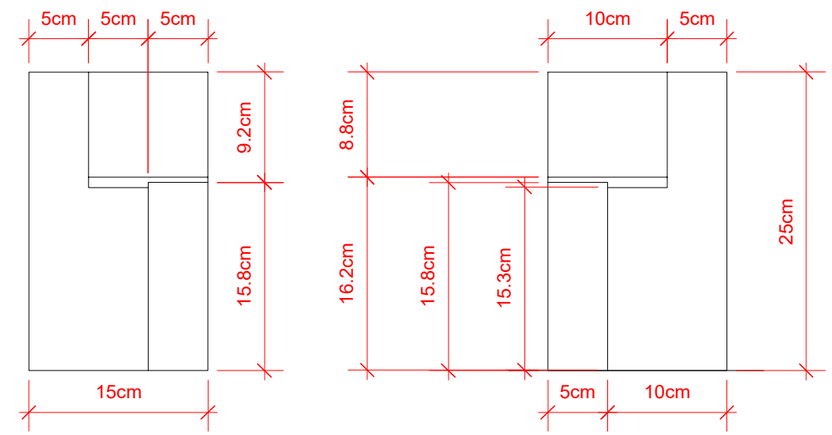

5 Vista Frontal
Scale: 1:5

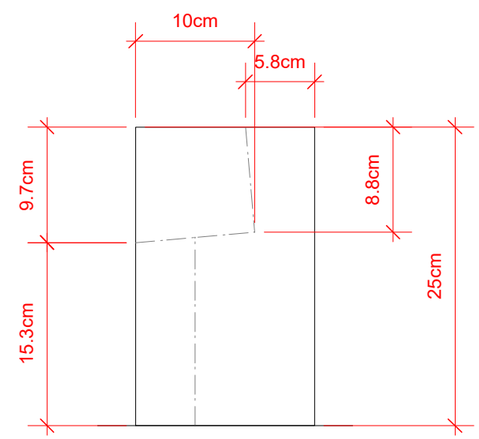

6 Vista Lateral
Scale: 1:5

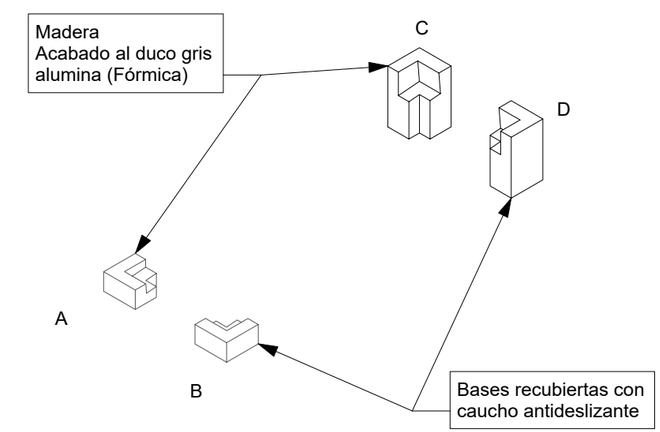

7 Isométrico
Scale: 1:20

NOTA
Las bases se ubican bajo las esquinas de la cama las mas bajas (A-B) van en la parte delantera y las mas altas (C-D) en la parte posterior.

Actualizado: 19 de agosto de 2015

Date	06/05/15
Revision	Revisión
Project ID	MADI
Drawing Code	Drawing Code
CAD File Name	Muebles_Brissa
Revision	00/00/00
Designed By	Blanca Castillo
Drawn By	Blanca Castillo
Checked By	MA
Reviewed By	Marcelo Albertal
Submitted By	BC
Project Manager	Marcelo Albertal
Design Firm	MADI Calle 88 #10-62 Bogota, DC, Colombia 3017867314 biancacastillog@gmail.com
Consultant	Marcelo Albertal design International
Project Title	Mobiliario BRISSA 2015
Sheet Title	BR-127 Base Cama Vitrina
Scale	Ver escala de cada dibujo
Sheet No.	20 of 83

No.	Date	Issue Notes	No.	Date	Revision Notes	Zone	Appr

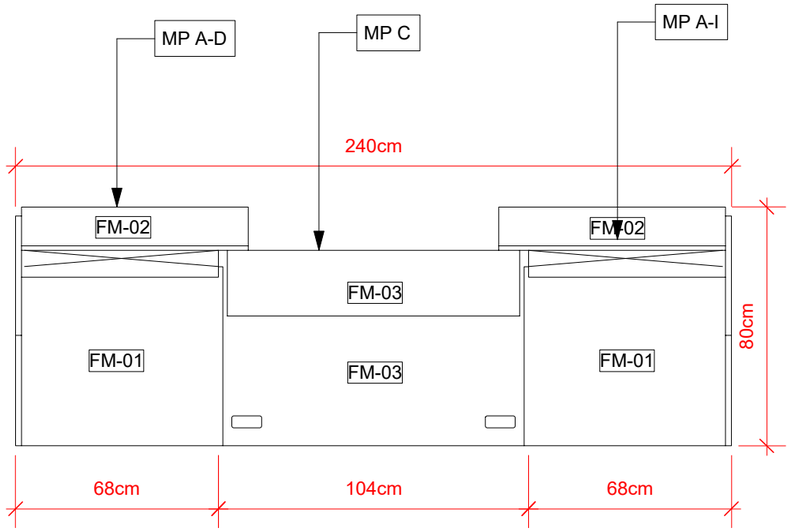

1 Vista Superior
Scale: 1:20

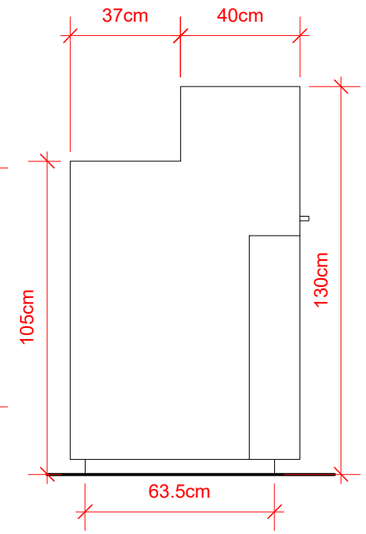

3 Vista Lateral Izq
Scale: 1:20

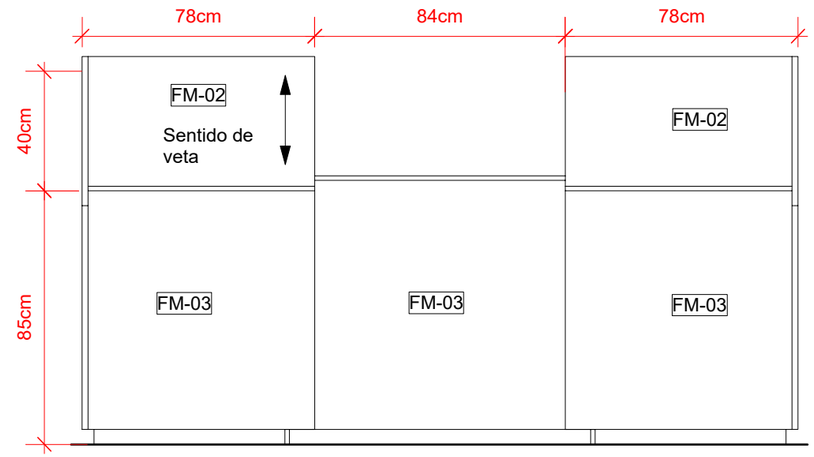

4 Vista Frontal
Scale: 1:20

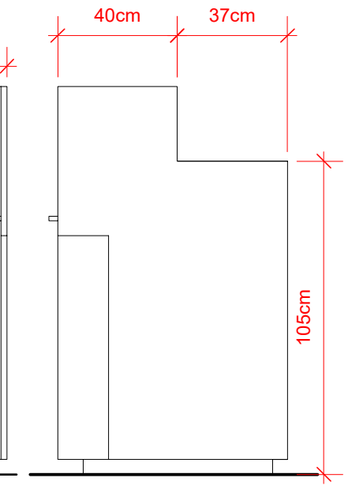

5 Vista Lateral Der
Scale: 1:20

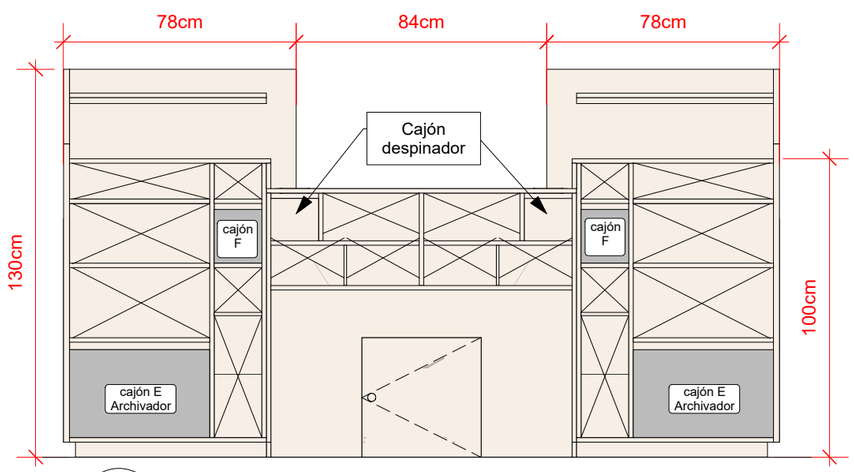

2 Vista Posterior
Scale: 1:20

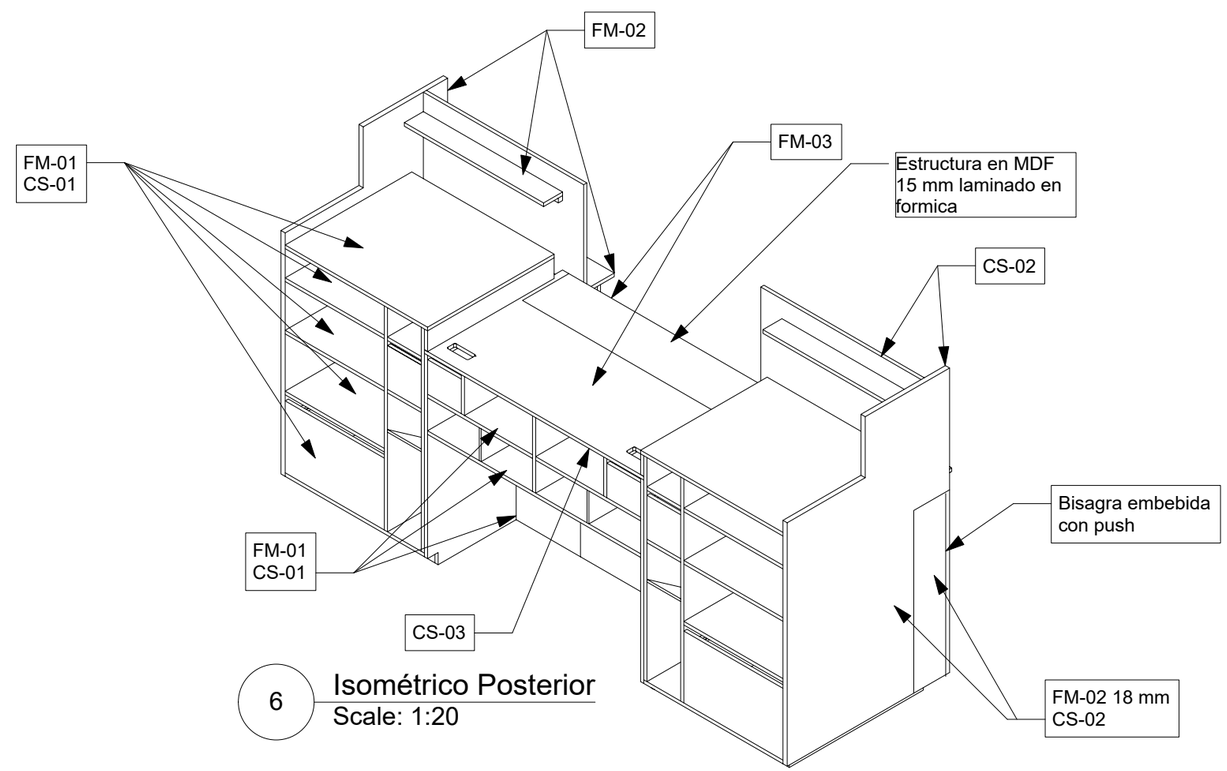

6 Isométrico Posterior
Scale: 1:20

Actualizado: 30 de septiembre de 2015

Designed By	Bianca Castillo
Drawn By	Bianca Castillo
Checked By	MA
Reviewed By	Marcelo Albertal
Submitted By	BC
Project Manager	Marcelo Albertal
Date	06/05/15
Revision	Revisión
Project ID	MADI
Drawing Code	Drawing Code
CAD File Name	Muebles_Brissa
PAGE Code	0/00/000

Design Firm
MADI
Calle 88 #10-62 Bogota, DC, Colombia
3017867314
biancacastillog@gmail.com

Consultant
Marcelo Albertal design International

Project Title
Mobiliario BRISSA 2015

Sheet Title
BR-130 Modulo Pago

Scale
Ver escala de cada dibujo

Sheet No.
21
of
83

Appr | Zone | Revision Notes | Date | No. | Issue Notes | Date | No.

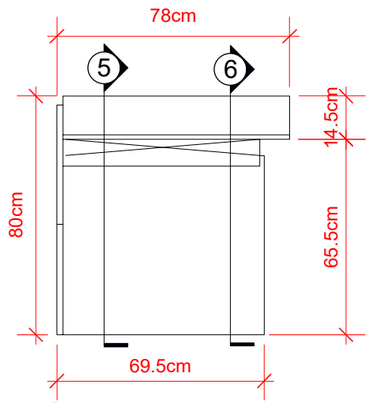

1 Vista Superior
Scale: 1:20

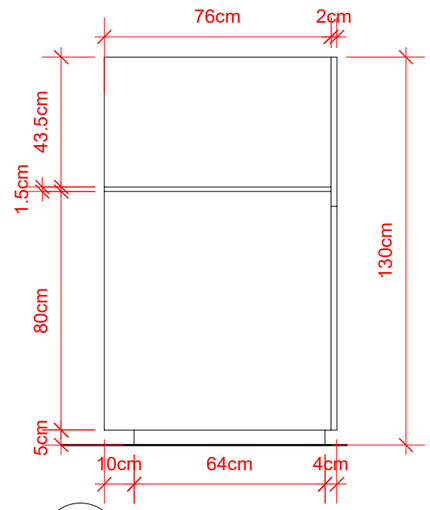

3 Vista Frontal
Scale: 1:20

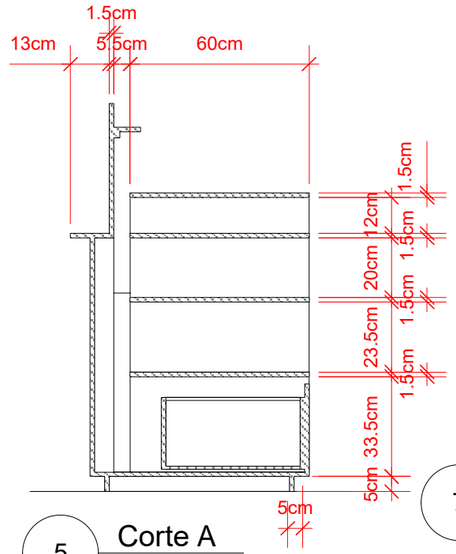

5 Corte A
Scale: 1:20

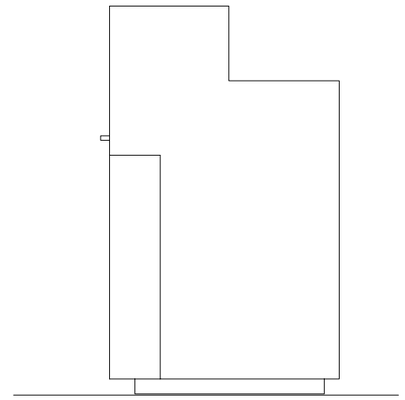

7 Vista Lateral Izquierda
Scale: 1:20

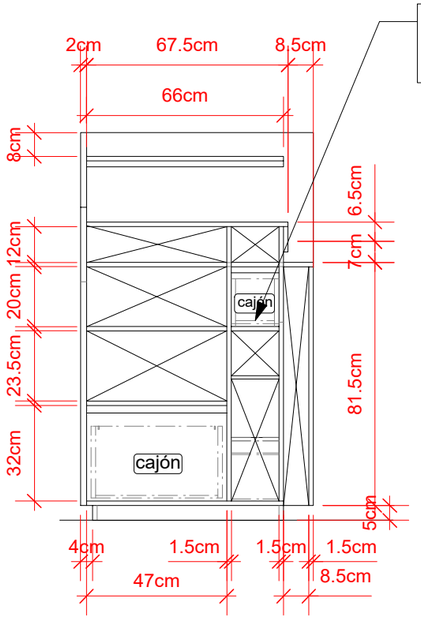

2 Vista Frontal
Scale: 1:20

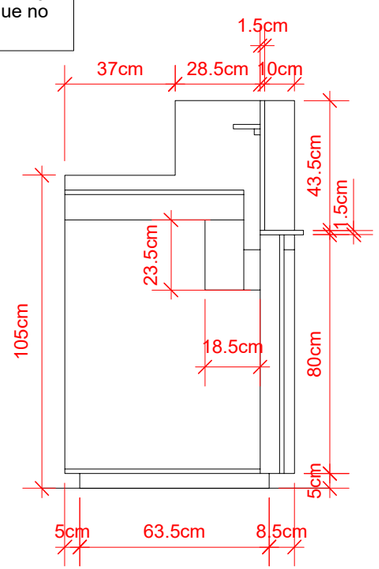

4 Vista Lateral
Scale: 1:20

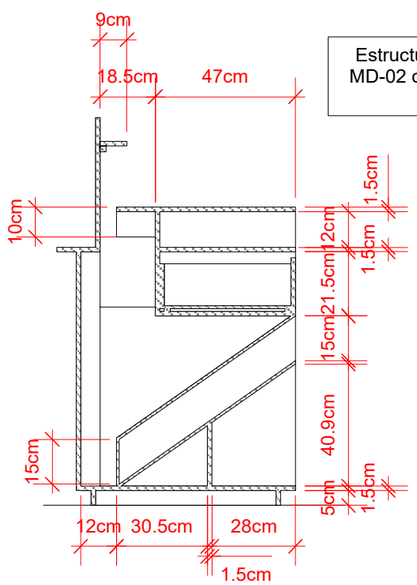

6 Corte B
Scale: 1:20

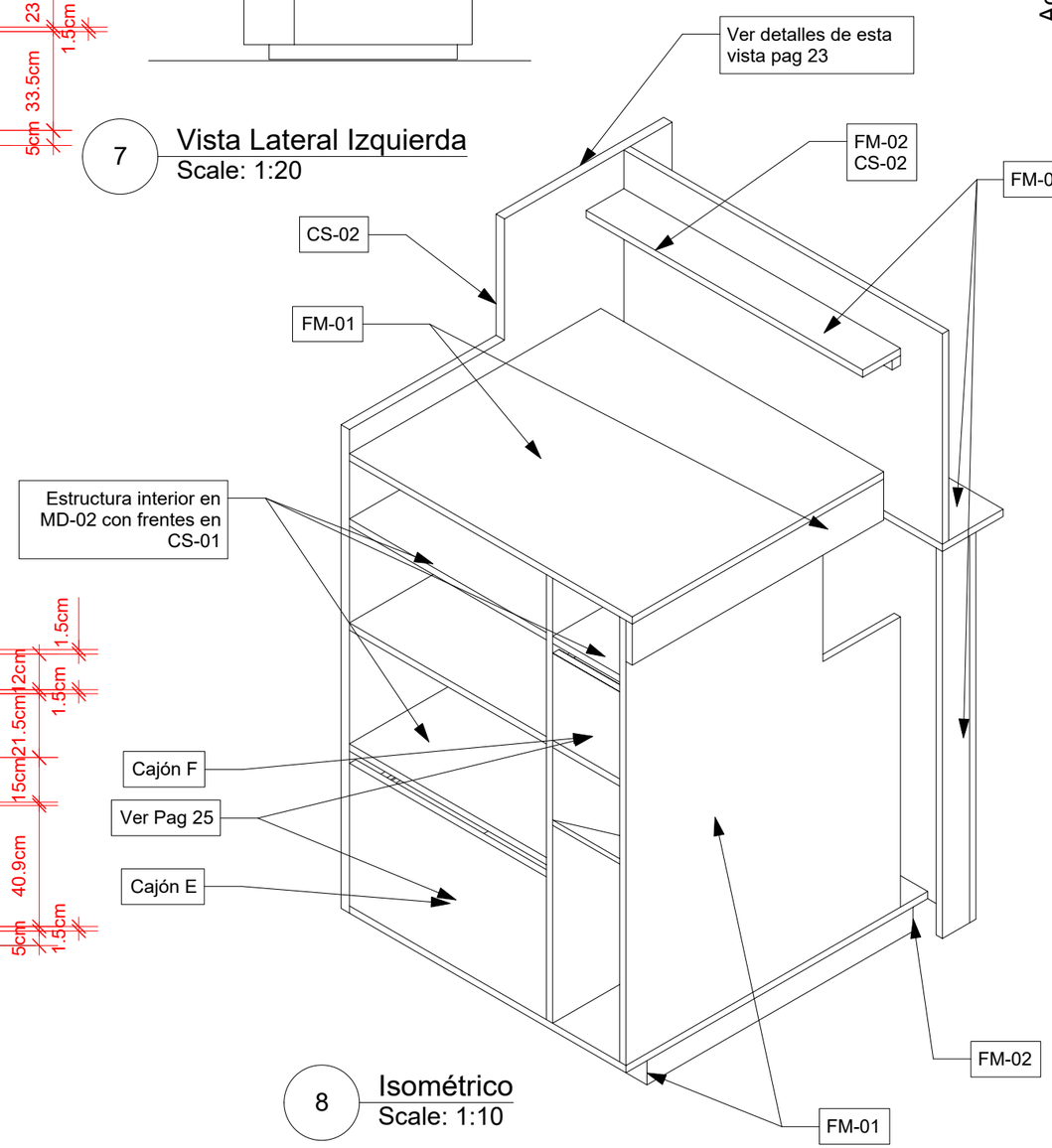

8 Isométrico
Scale: 1:10

Actualizado:1 de octubre de 2015

No.	Date	Issue Notes	Revision Notes	Zone	Appr

Date	06/05/15
Revision	Revision
Project ID	MADI
Drawing Code	Drawing Code
CAD File Name	Muebles_Brissa
PLOT Date	00/00/00
Designed By	Bianca Castillo
Drawn By	Bianca Castillo
Checked By	MA
Reviewed By	Marcelo Albertal
Submitted By	BC
Project Manager	Marcelo Albertal

Design Firm
MADI
Calle 88 #10-62 Bogota, DC, Colombia
3017867314
biancacastilloq@gmail.com
Consultant
Marcelo Albertal design International

Project Title
Mobiliario BRISSA
2015

Sheet Title
BR-130 Modulo Pago A-D

Scale
Ver escala de cada dibujo

Sheet No.
22
of
83

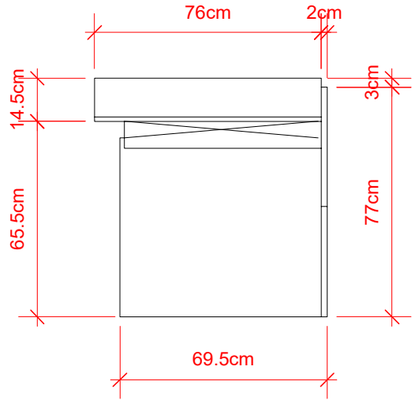

1 Vista Superior
Scale: 1:20

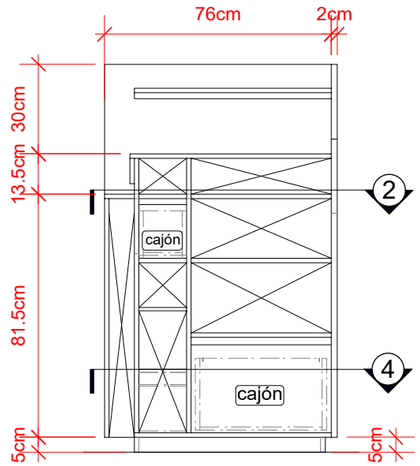

3 Vista Posterior
Scale: 1:20

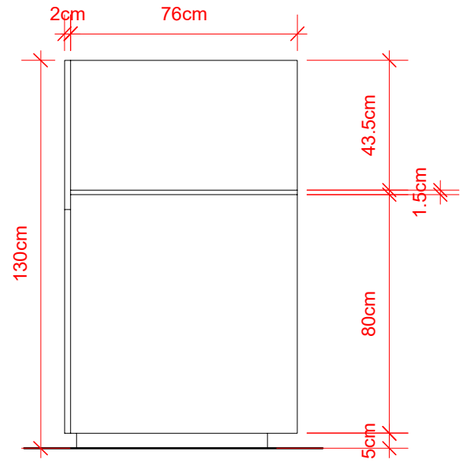

5 Vista Frontal
Scale: 1:20

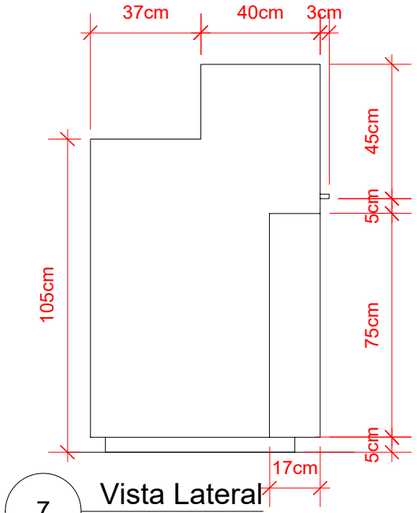

7 Vista Lateral
Scale: 1:20

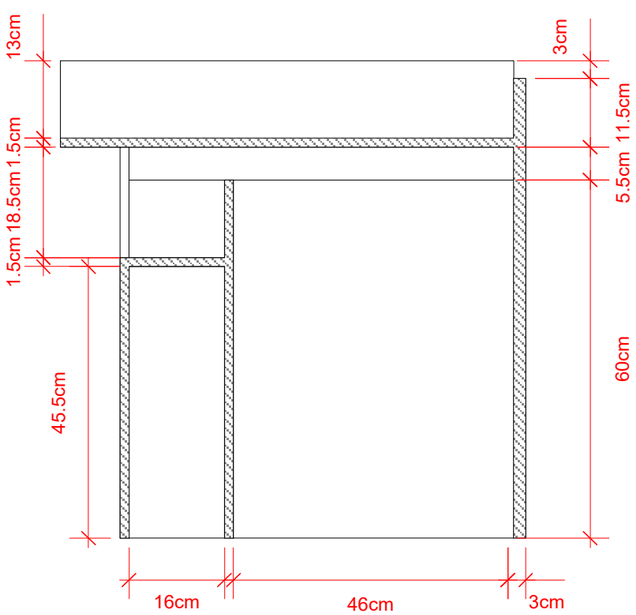

2 Corte C
Scale: 1:10

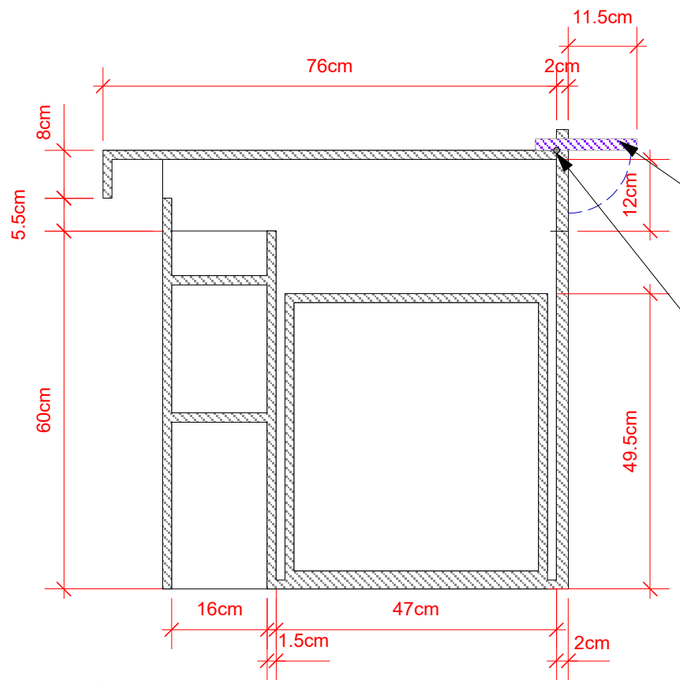

4 Corte D
Scale: 1:10

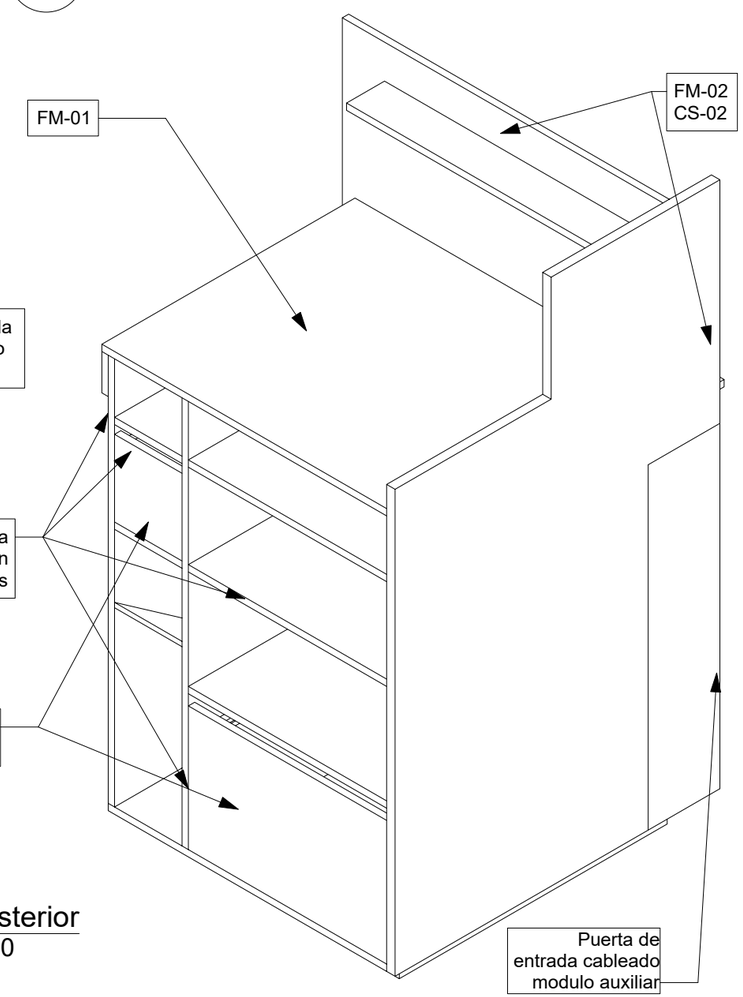

6 Vista Posterior
Scale: 1:10

Actualizado:1 de octubre de 2015

Designed By	Blanca Castillo
Drawn By	Blanca Castillo
Checked By	MA
Reviewed By	Marcelo Albertal
Submitted By	BC
Project Manager	Marcelo Albertal
Date	06/05/15
Revision	Revision
Project ID	MADI
Drawing Code	Drawing Code
CAD File Name	Muebles_Brissa
Plot Date	00/00/00

Design Firm
MADI
Calle 88 #10-62 Bogota, DC, Colombia
3017867314
biancacastillog@gmail.com

Consultant
Marcelo Albertal design International

Project Title
Mobiliario BRISSA
2015

Sheet Title
BR-131 Modulo Pago A-I

Scale
Ver escala de cada dibujo

Sheet No.
23
of
83

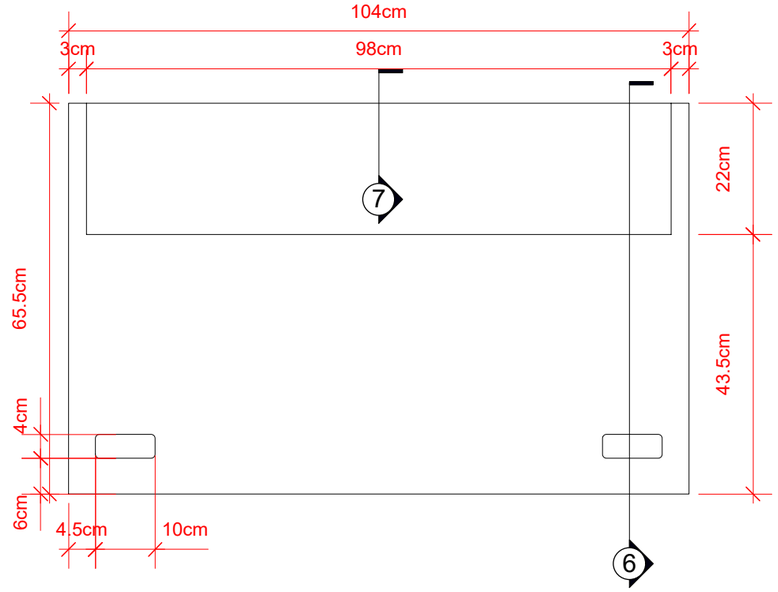

1 Vista Superior
Scale: 1:10

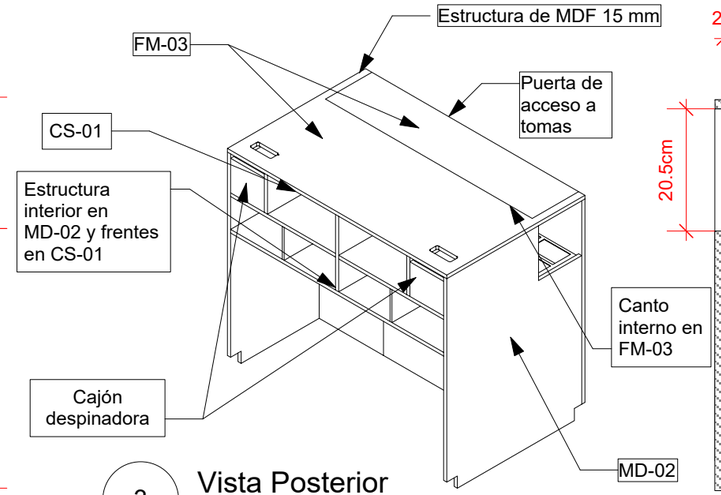

3 Vista Posterior
Scale: 1:20

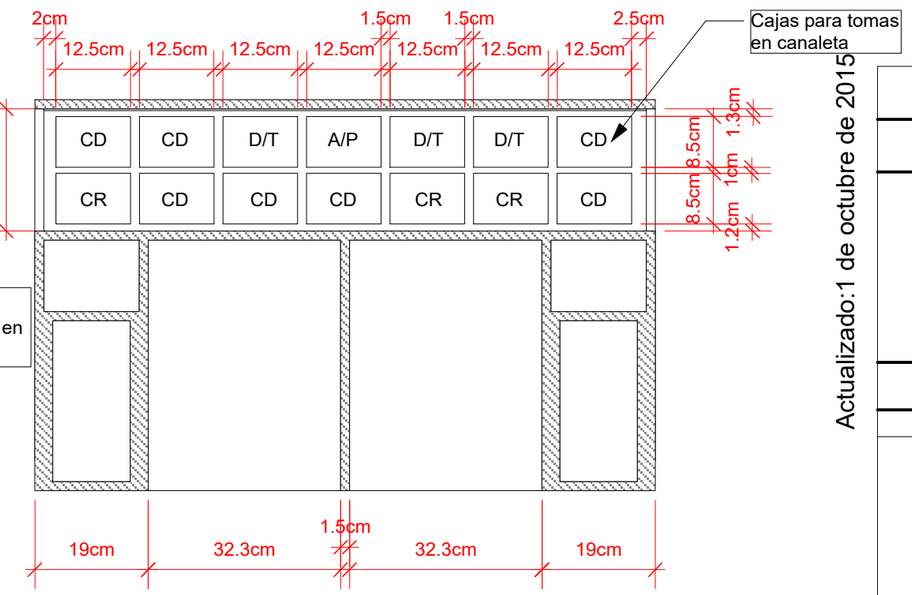

5 Corte G
Scale: 1:10

Actualizado:1 de octubre de 2015

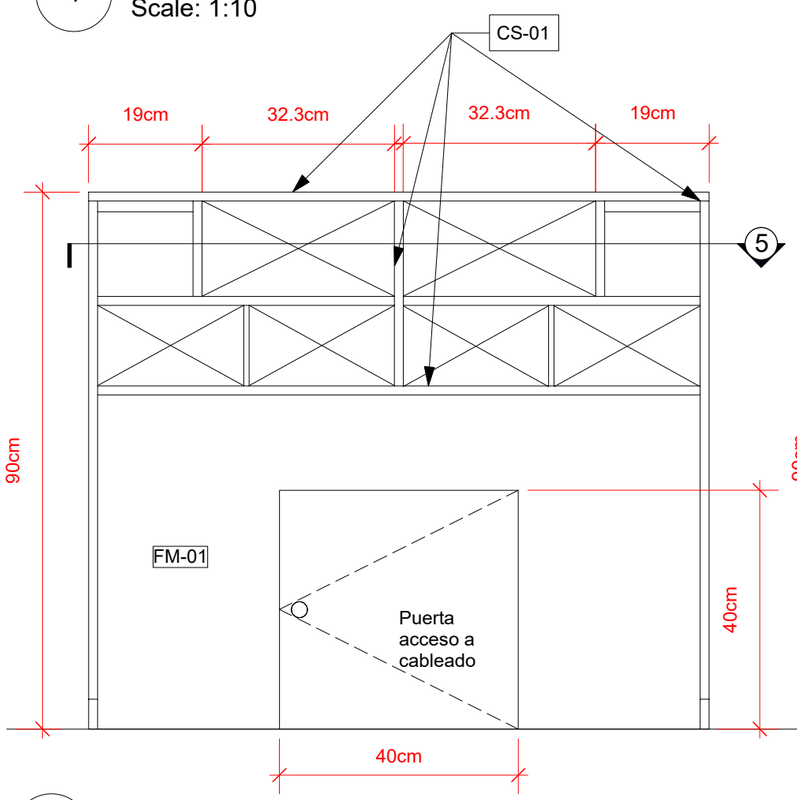

2 Vista Posterior
Scale: 1:10

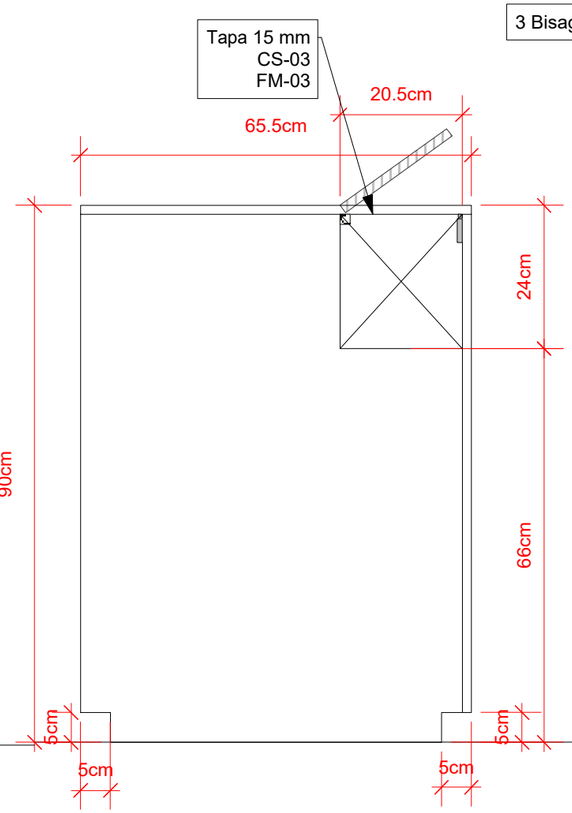

4 Vista Lateral
Scale: 1:10

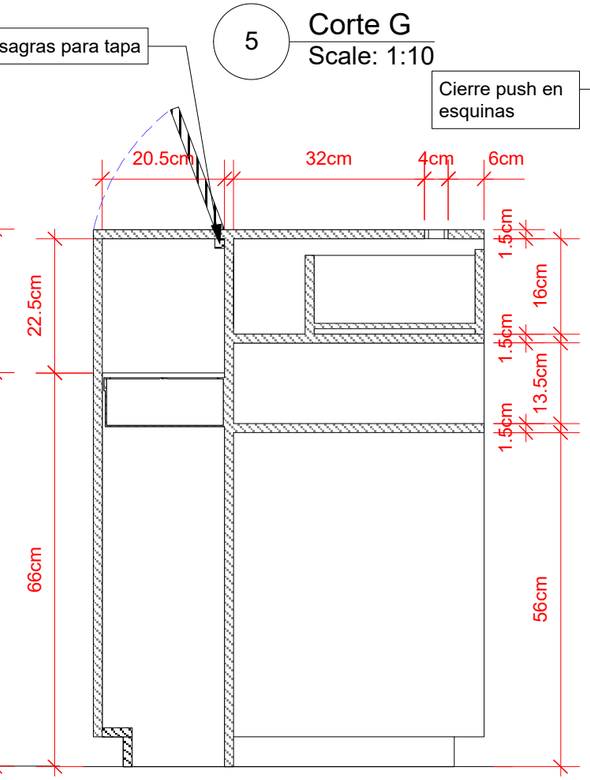

6 Corte E
Scale: 1:10

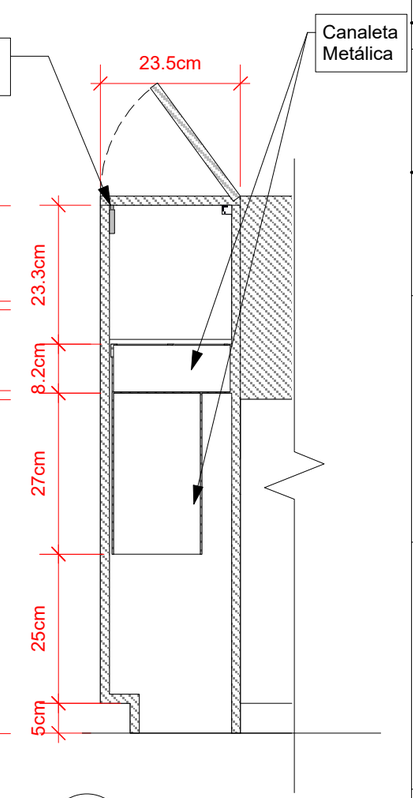

7 Corte F
Scale: 1:10

Date	06/05/15
Revision	Revisión
Project ID	MADI
Drawing Code	Drawing Code
CAD File Name	Muebles_Brissa
Revision Date	00/00/00
Designed By	Blanca Castillo
Drawn By	Blanca Castillo
Checked By	MA
Reviewed By	Marcelo Albertal
Submitted By	BC
Project Manager	Marcelo Albertal

Design Firm
MADI
Calle 88 #10-62 Bogota, DC, Colombia
3017867314
biancacastillog@gmail.com

Consultant
Marcelo Albertal design International

Project Title
Mobiliario BRISSA
2015

Sheet Title
BR-132 Modulo Pago C

Scale
Ver escala de cada dibujo

Sheet No.
24
of
83

Cajón E Archivador
Modulo de Pago A Derecho e Izquierdo

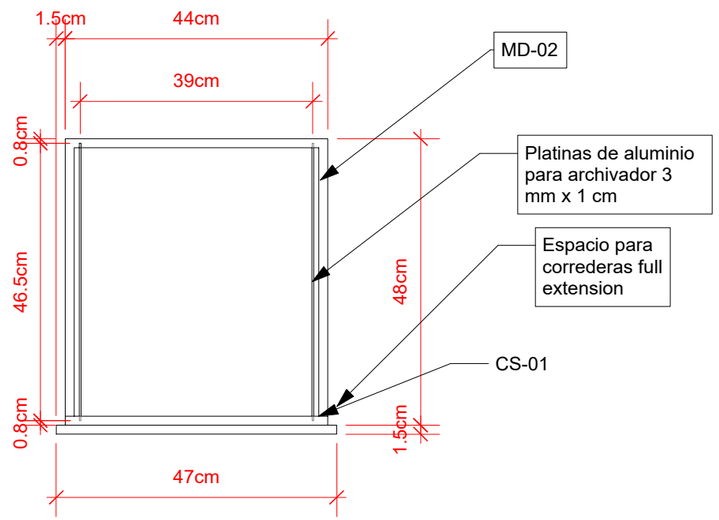

1 Vista Superior
Scale: 1:10

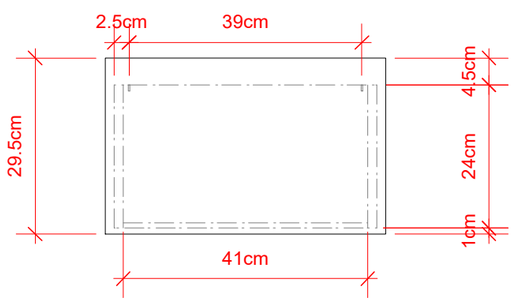

2 Vista Frontal
Scale: 1:10

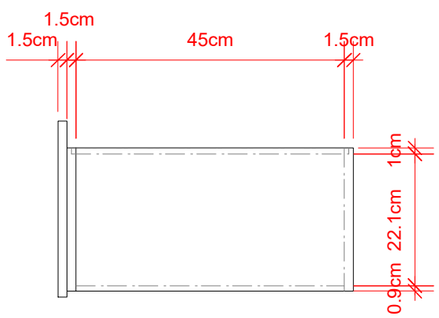

3 Vista Lateral
Scale: 1:10

Cajón F
Modulo de Pago A Derecho e Izquierdo

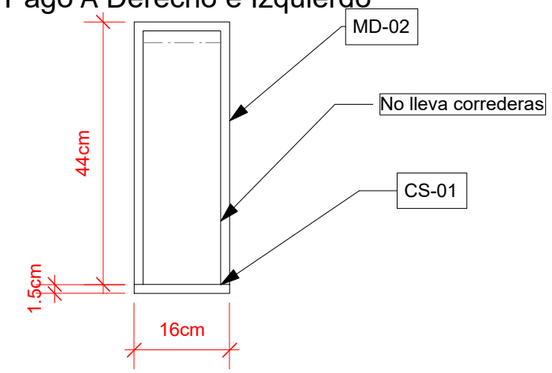

4 Vista Superior
Scale: 1:10

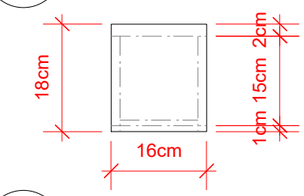

5 Vista Frontal
Scale: 1:10

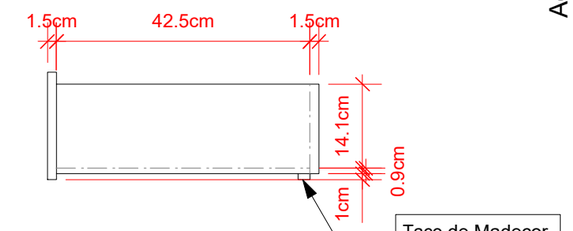

8 Vista Lateral
Scale: 1:10

Cajón Despinador
Modulo Central

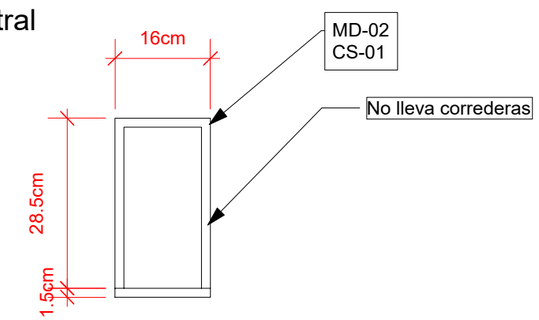

6 Vista Superior
Scale: 1:10

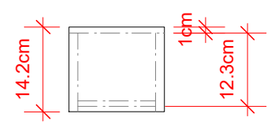

7 Vista Frontal
Scale: 1:10

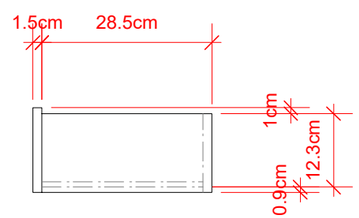

9 Vista Lateral
Scale: 1:10

Actualizado:1 de octubre de 2015

No.	Date	No.	Date	Issue Notes	Revision Notes	Zone	Appr

Date 06/05/15
Revision Revision
Project ID MADI
Drawing Code Drawing Code
CAD File Name Muebles_Brissa
Revision 00/00/00

Designed By Blanca Castillo
Drawn By Blanca Castillo
Checked By MA
Reviewed By Marcelo Albertal
Submitted By BC
Project Manager Marcelo Albertal

Design Firm
MADI
Calle 88 #10-62 Bogota, DC, Colombia
3017867314
biancacastilloq@gmail.com

Consultant
Marcelo Albertal design international

Project Title
Mobiliario BRISSA
2015

Sheet Title
BR-130 Modulo Pago Cajones

Scale
Ver escala de cada dibujo

Sheet No.
25
of
83

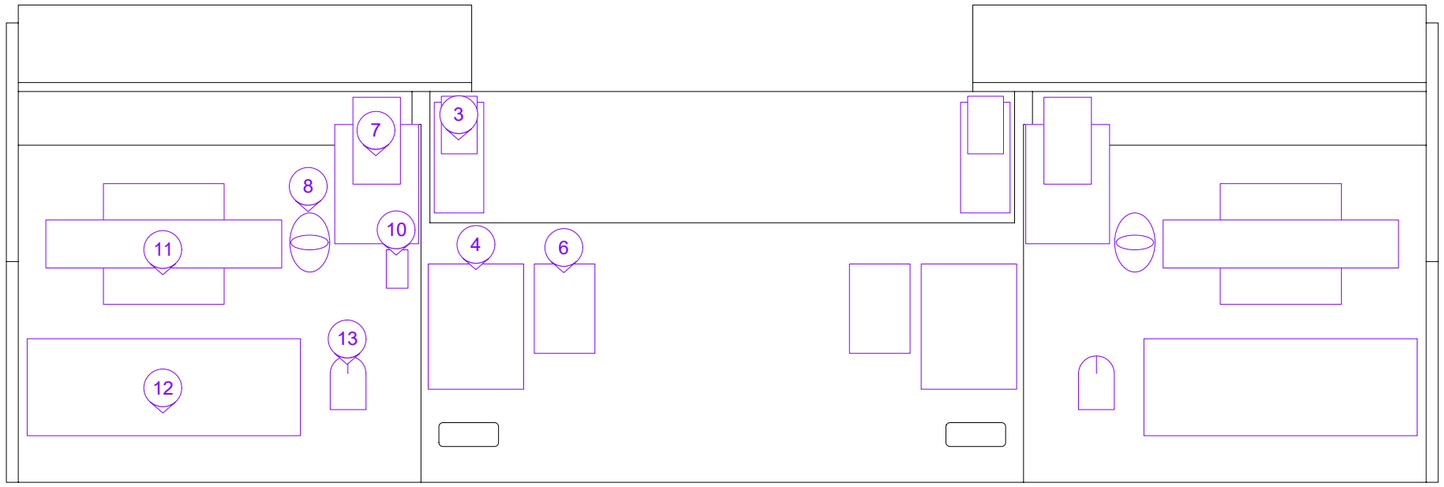

1 Vista Superior
Scale: 1:10

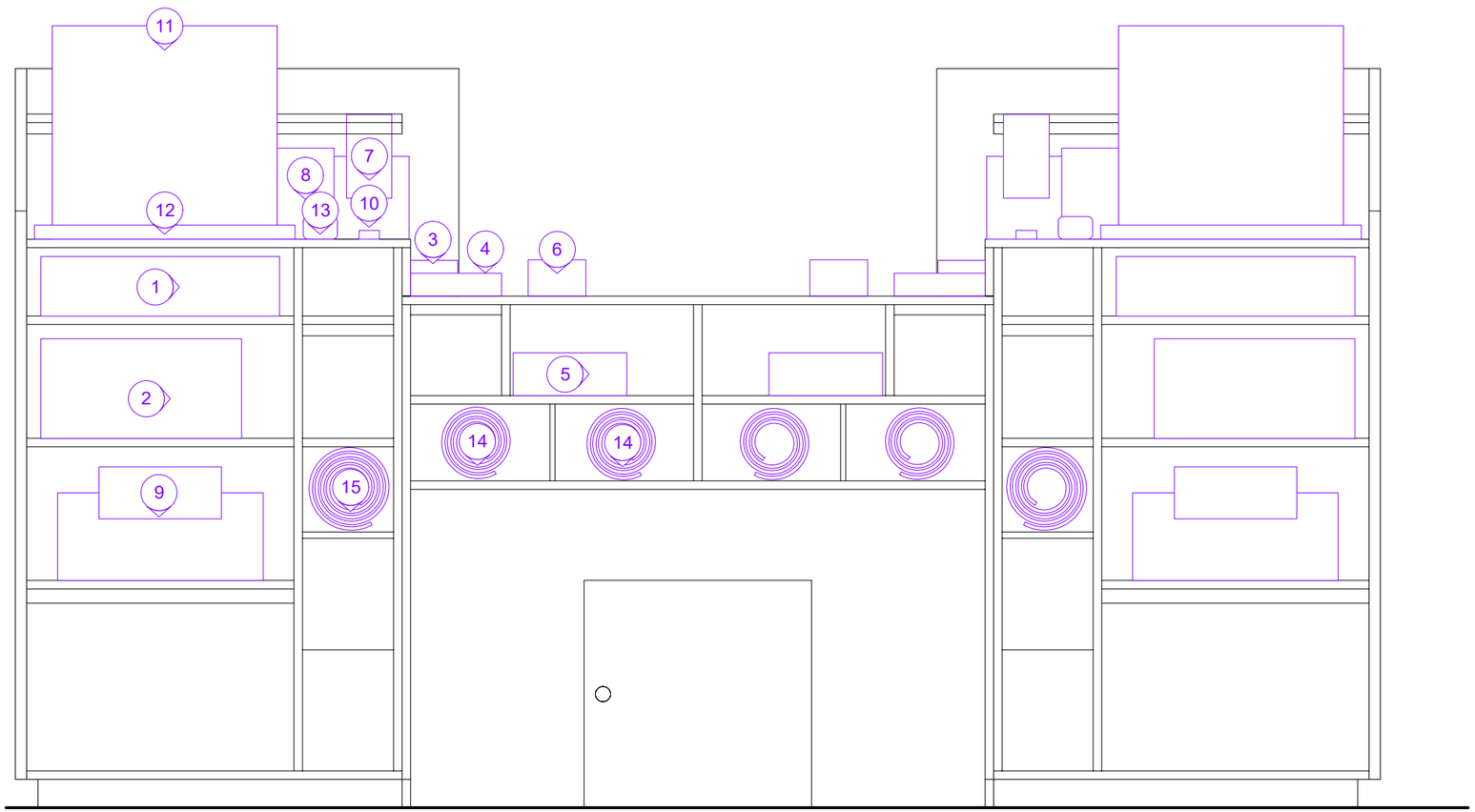

2 Vista Frontal
Scale: 1:10

UBICACION DE EQUIPOS EN MODULO DE PAGO

CODIGO	DESCRIPCION
1	Monedero
2	CPU
3	Datafono
4	Desactivador fijo
5	Desactivador manual
6	Desactivador eléctrico
7	Impresora POS digital
8	Lector de barras
9	Impresora de cinta
10	Lector de huella
11	Pantalla
12	Teclado
13	Mouse
14	Bolsas de 40 Ancho
15	Rollo Bolsas 60 cm de ancho

Actualizado:1 de octubre de 2015

No.	Date	Issue Notes	Revision Notes	Zone	Appr

No.	Date	Issue Notes	Revision Notes	Zone	Appr

Date 06/05/15
Revision Revisión
Project ID MADI
Drawing Code Drawing Code
CAD File Name Muebles_Brissa
PAGE/Date 00/00/00

Designed By Bianca Castillo
Drawn By Bianca Castillo
Checked By MA
Reviewed By Marcelo Albertal
Submitted By BC
Project Manager Marcelo Albertal

Design Firm
MADI
Calle 88 #10-62 Bogota, DC, Colombia
3017867314
biancacastillog@gmail.com

Consultant
Marcelo Albertal design International

Project Title
Mobiliario BRISSA
2015

Sheet Title
BR-130 Modulo Pago
Ubicación de Equipos

Scale
Ver escala de cada dibujo

Sheet No.
26
of
83

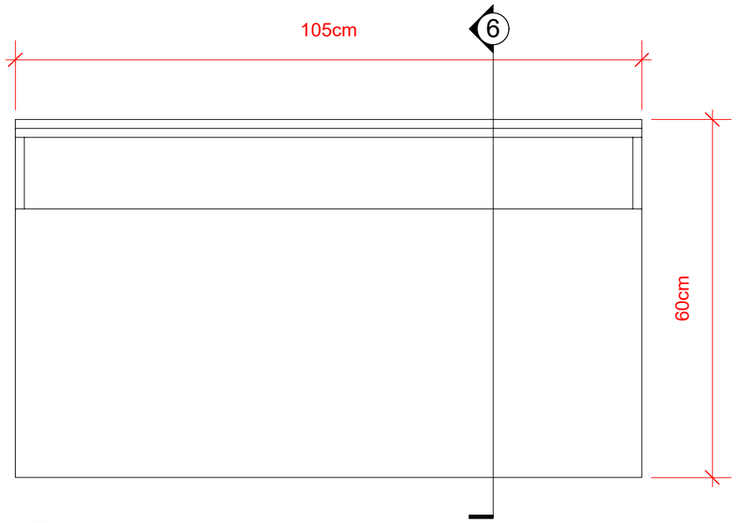

1 Vista Superior
Scale: 1:10

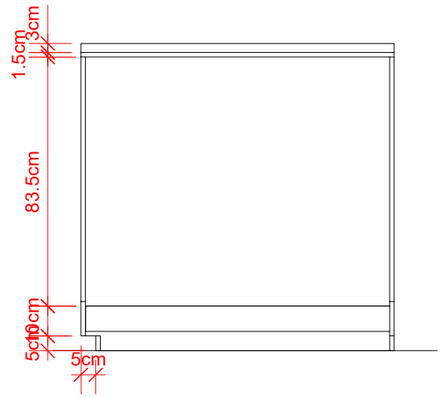

3 Vista Posterior
Scale: 1:20

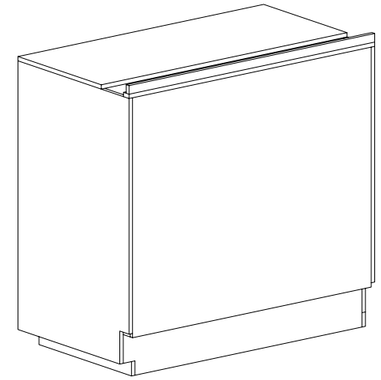

5 Perspectiva Posterior
Scale: 1:20

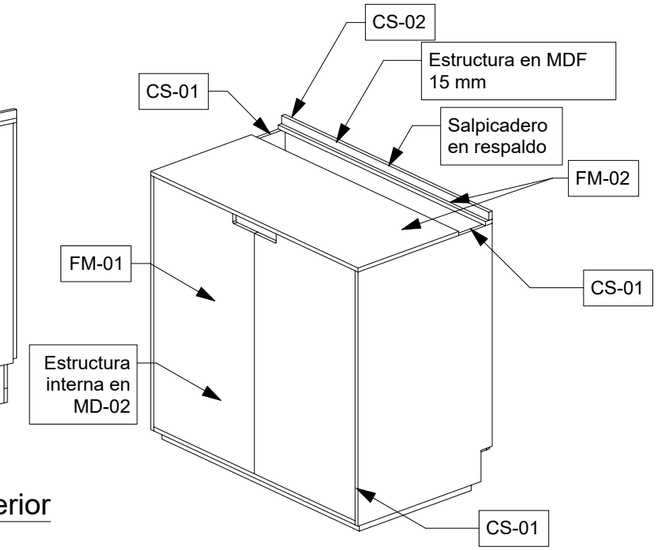

7 Perspectiva
Scale: 1:20

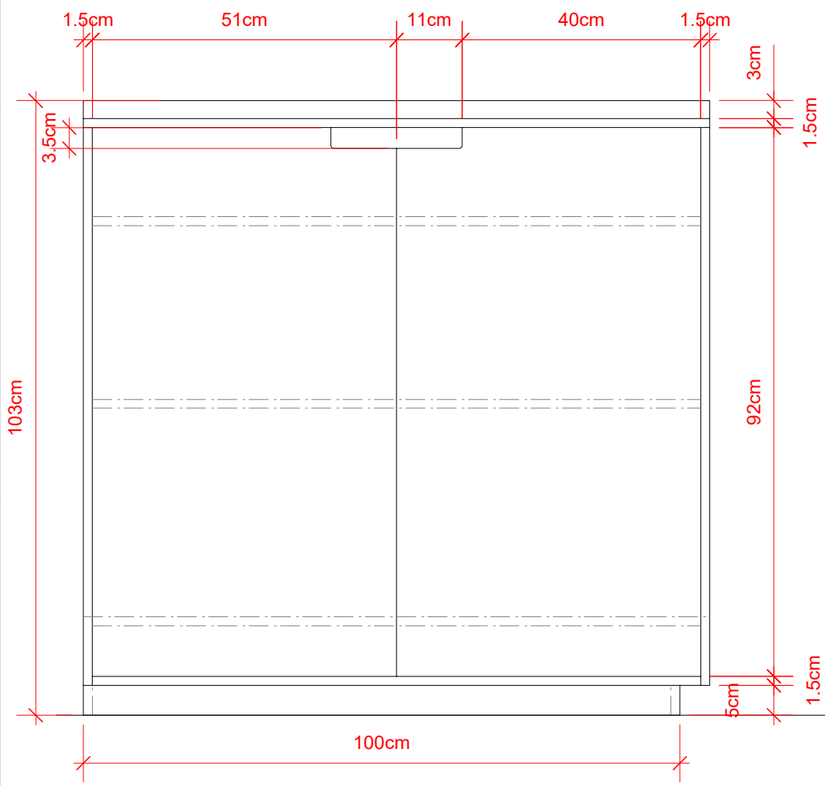

2 Vista Frontal
Scale: 1:10

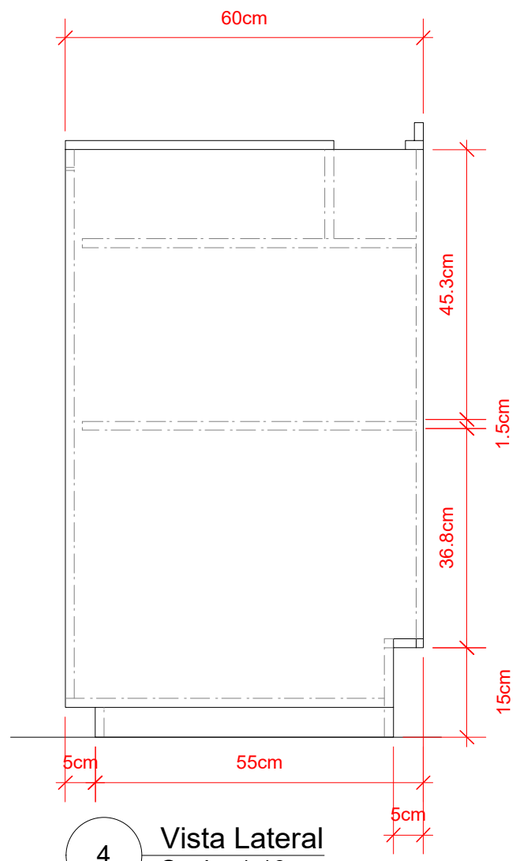

4 Vista Lateral
Scale: 1:10

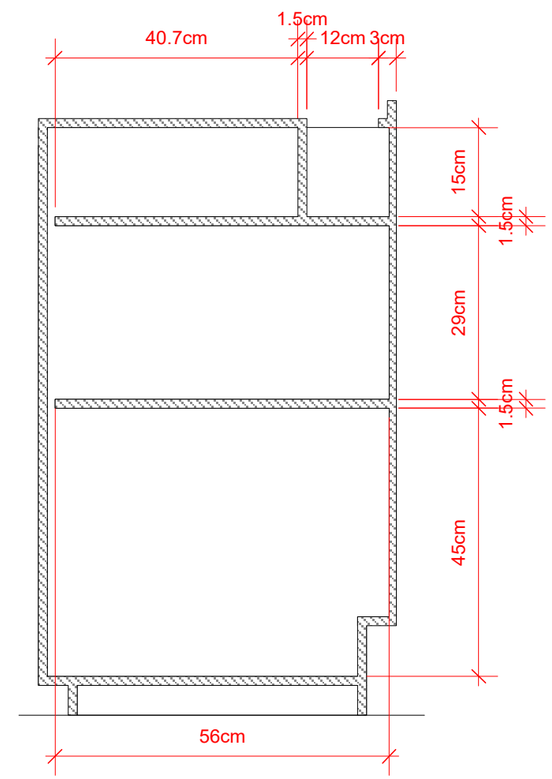

6 Corte
Scale: 1:10

Actualizado:1 de octubre de 2015

Designed By	Bianca Castillo
Drawn By	Bianca Castillo
Checked By	MA
Reviewed By	Marcelo Albertal
Submitted By	BC
Project Manager	Marcelo Albertal
Date	06/05/15
Revision	Revisión
Project ID	MADI
Drawing Code	Drawing Code
CAD File Name	Muebles_Brissa
PDF/Code	00/00/00

Appr | Zone | Revision Notes | Date | No. | Issue Notes | Date | No.

Design Firm
MADI
Calle 88 #10-62 Bogota, DC, Colombia
3017867314
biancacastillog@gmail.com

Consultant
Marcelo Albertal design International

Project Title
Mobiliario BRISSA
2015

Sheet Title
BR-135 Modulo de Servicio A

Scale
Ver escala de cada dibujo

Sheet No.
27
of
83

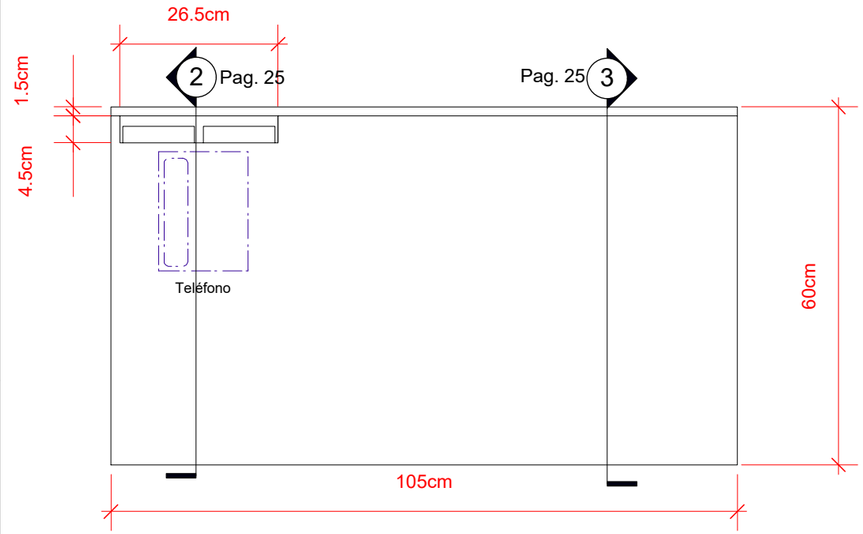

1 Vista Superior
Scale: 1:10

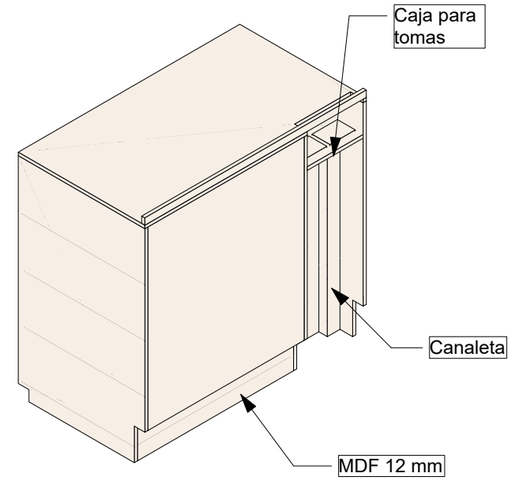

3 Vista Posterior
Scale: 1:20

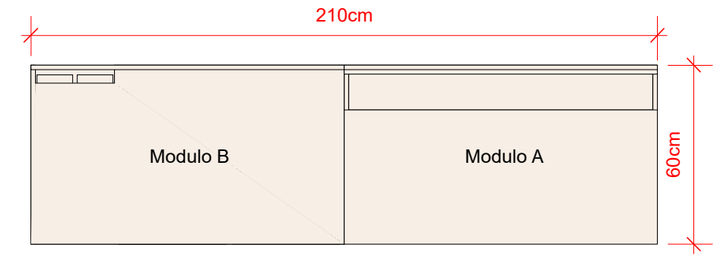

5 Vista Superior Modulos de Servicio
Scale: 1:20

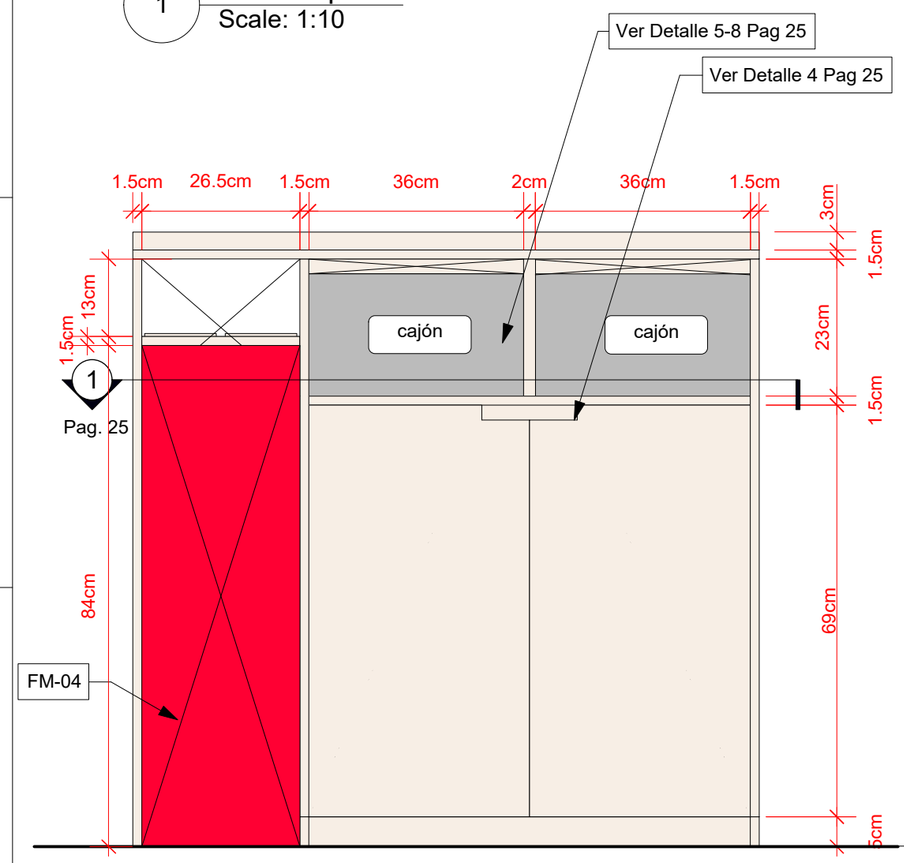

2 Vista Frontal
Scale: 1:10

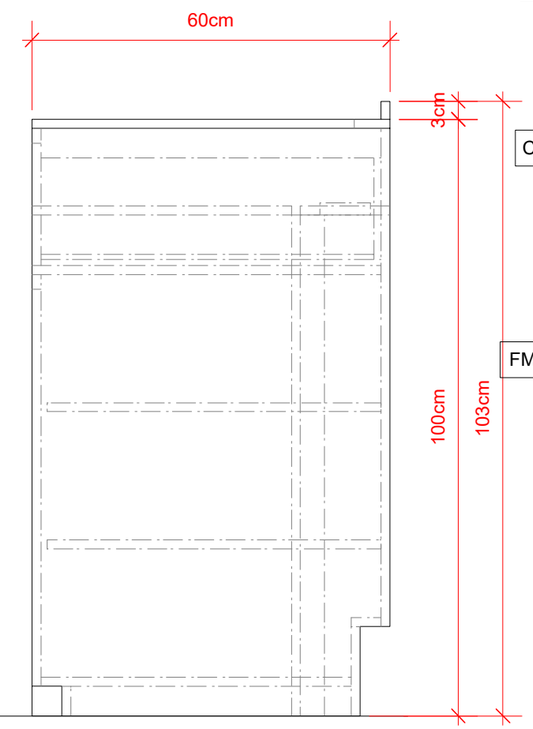

4 Vista Lateral
Scale: 1:10

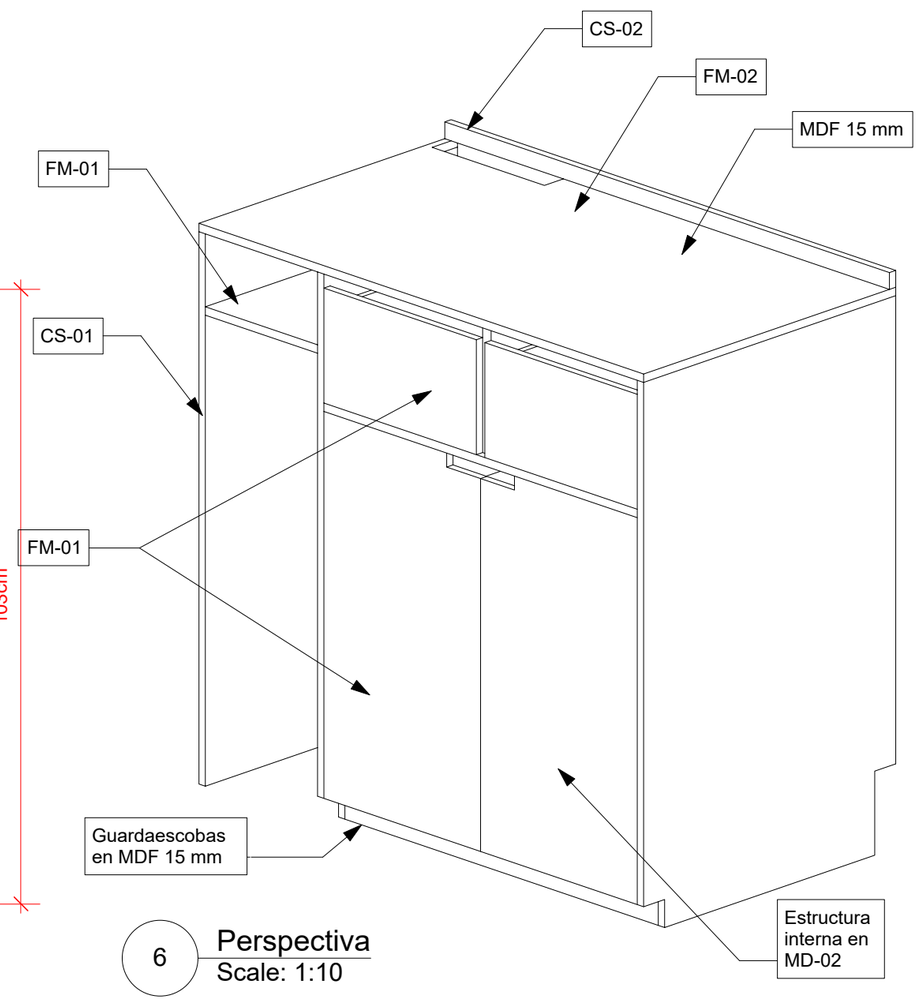

6 Perspectiva
Scale: 1:10

Actualizado:1 de octubre de 2015

Designed By	Banca Castillo	Date	06/05/15	Scale	Ver escala de cada dibujo
Drawn By	Banca Castillo	Revision	Revision	Sheet No.	28 of 83
Checked By	MA	Project ID	MADI		
Reviewed By	Marcelo Albertal	Drawing Code			
Submitted By	BC	CAD File Name	Muebles_Brissa		
Project Manager	Marcelo Albertal	Plot Date	00/00/00		

Design Firm: MADI
Calle 88 #10-62 Bogota, DC, Colombia
3017867314
biancacastillog@gmail.com

Consultant: Marcelo Albertal design international

Project Title: Mobiliario BRISSA 2015

Sheet Title: BR-136 Modulo de Servicio B

Appr | Zone | Revision Notes | Date | No. | Issue Notes | Date | No.

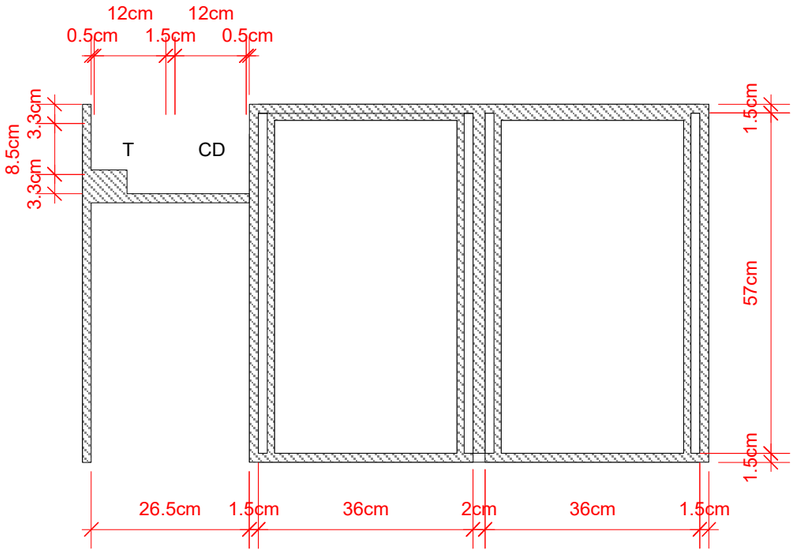

1 Corte A
Scale: 1:10

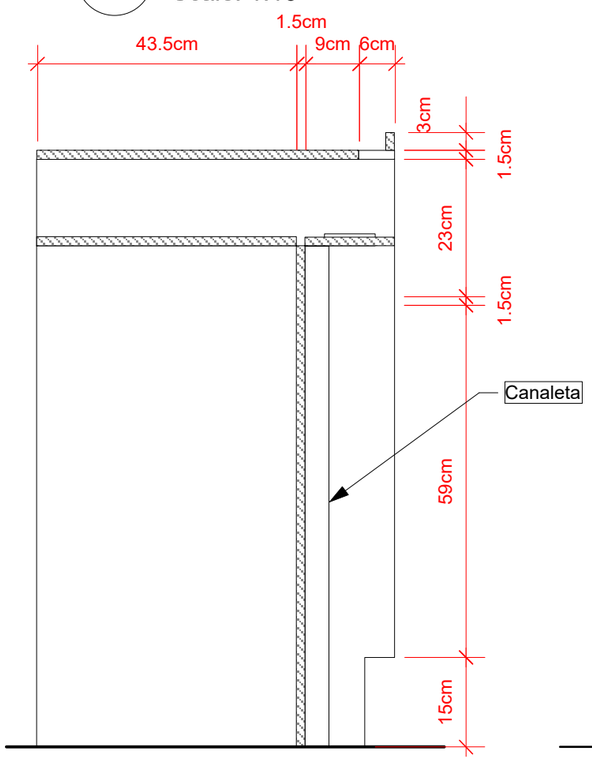

2 Corte B
Scale: 1:10

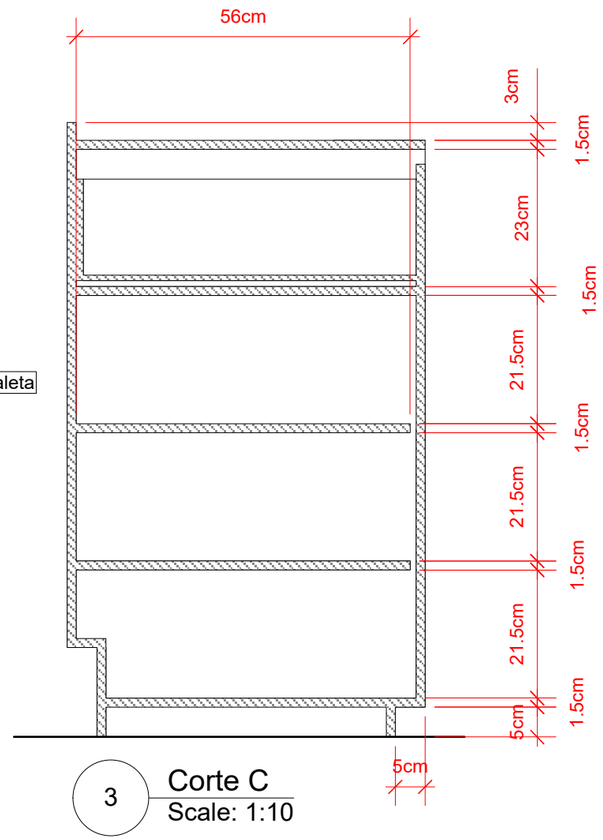

3 Corte C
Scale: 1:10

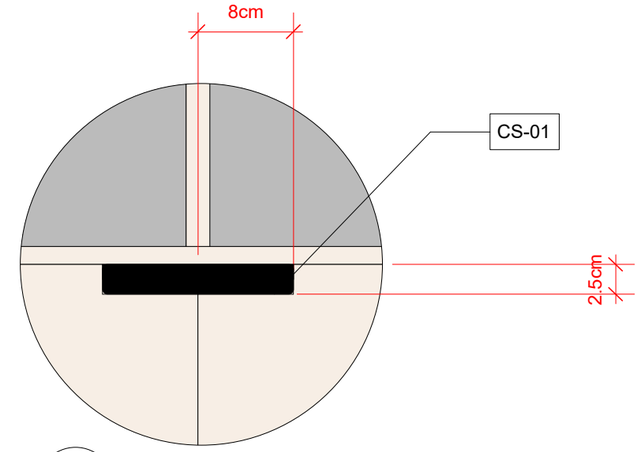

4 Detalle manijas puertas
Scale: 1:5

Cajón Modulo de servicio B

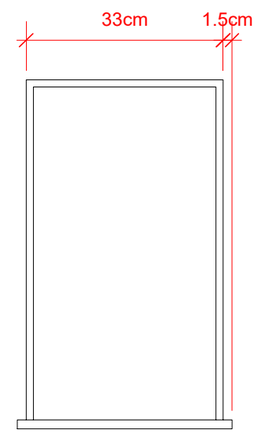

5 Vista Superior
Scale: 1:10

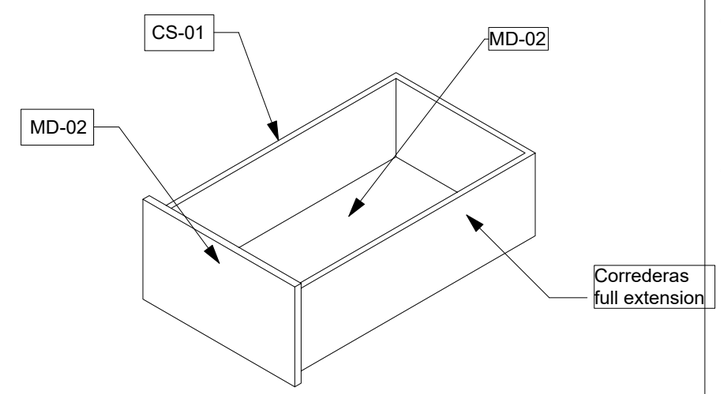

7 Isométrico
Scale: 1:10

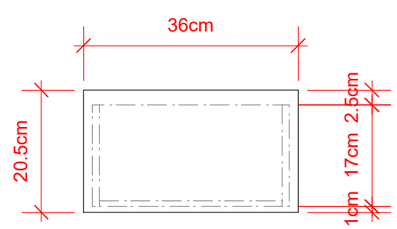

6 Vista Frontal
Scale: 1:10

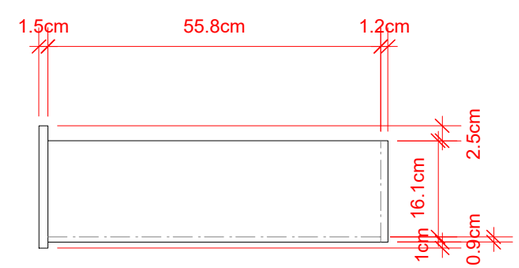

8 Vista Lateral
Scale: 1:10

Actualizado: 19 de agosto de 2015

No.	Date	Issue Notes	Revision Notes	Zone	Appr

Designed By	Blanca Castillo
Drawn By	Blanca Castillo
Checked By	MA
Reviewed By	Marcelo Albertal
Submitted By	BC
Project Manager	Marcelo Albertal
Date	06/05/15
Revision	Revision
Project ID	MADI
Drawing Code	Drawing Code
CAD File Name	Muebles_Brissa
Sheet Size	00/00/00

Design Firm
MADI
Calle 88 #10-62 Bogota, DC, Colombia
3017867314
biancacastillog@gmail.com

Consultant
Marcelo Albertal design International

Project Title
Mobiliario BRISSA
2015

Sheet Title
BR-136 Modulo de Servicio B
Detalles Modulo B

Scale
Ver escala de cada dibujo

Sheet No.
29
of
83

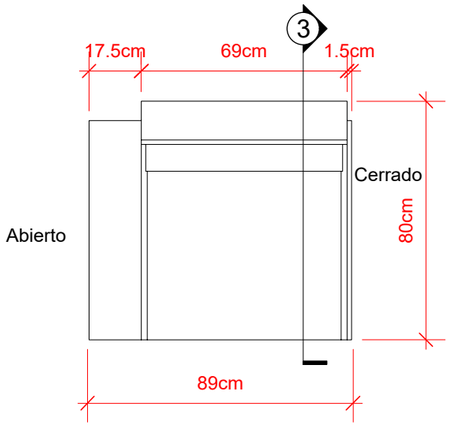

1 Vista Superior
Scale: 1:20

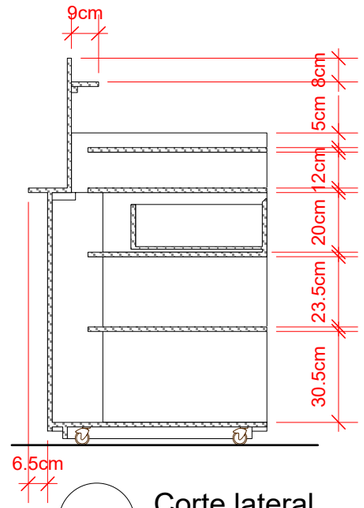

3 Corte lateral
Scale: 1:20

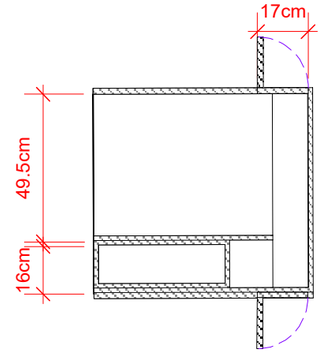

5 Corte
Scale: 1:20

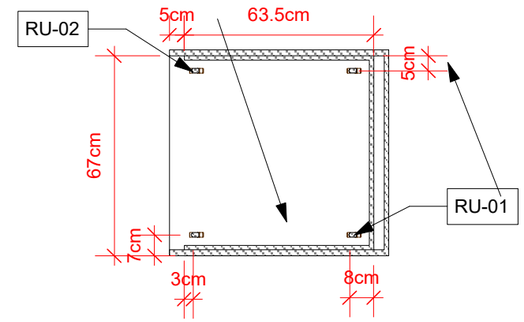

7 Corte guardapies
Scale: 1:20

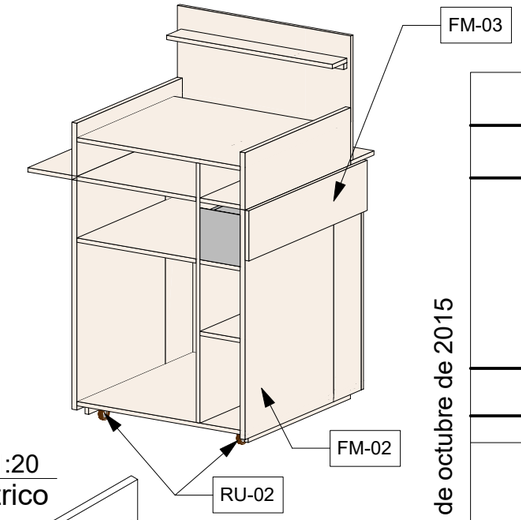

10 Scale: 1:20
Isométrico

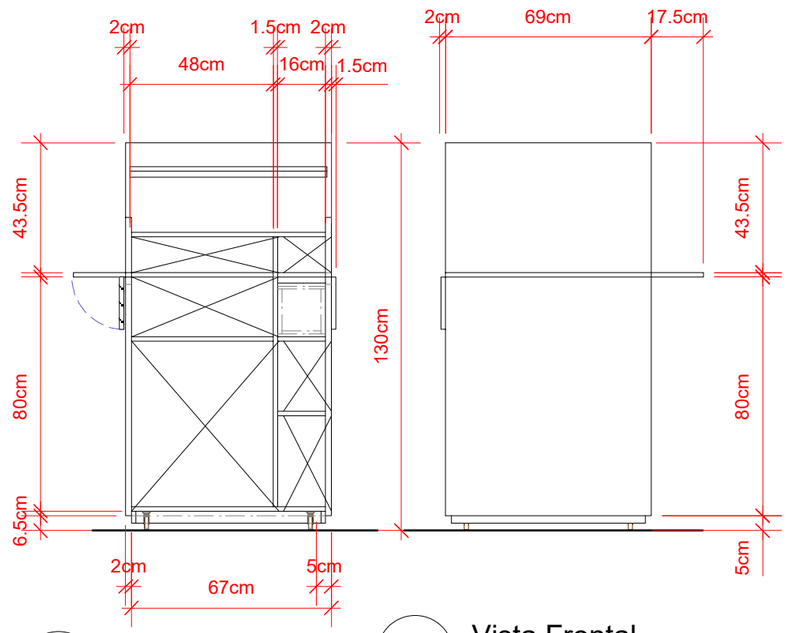

2 Vista Posterior
Scale: 1:20

4 Vista Frontal
Scale: 1:20

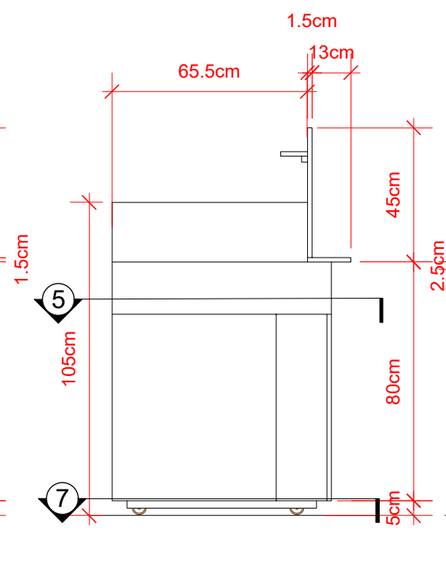

6 Vista Lateral Izq
Scale: 1:20

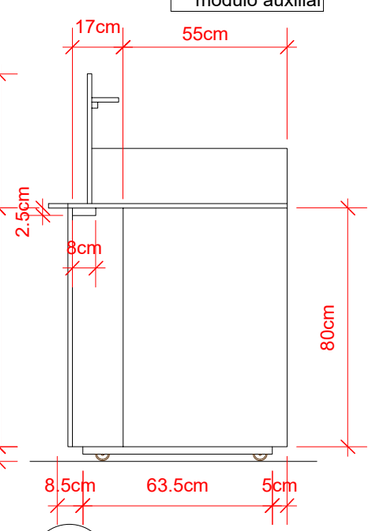

8 Vista Lateral Der
Scale: 1:20

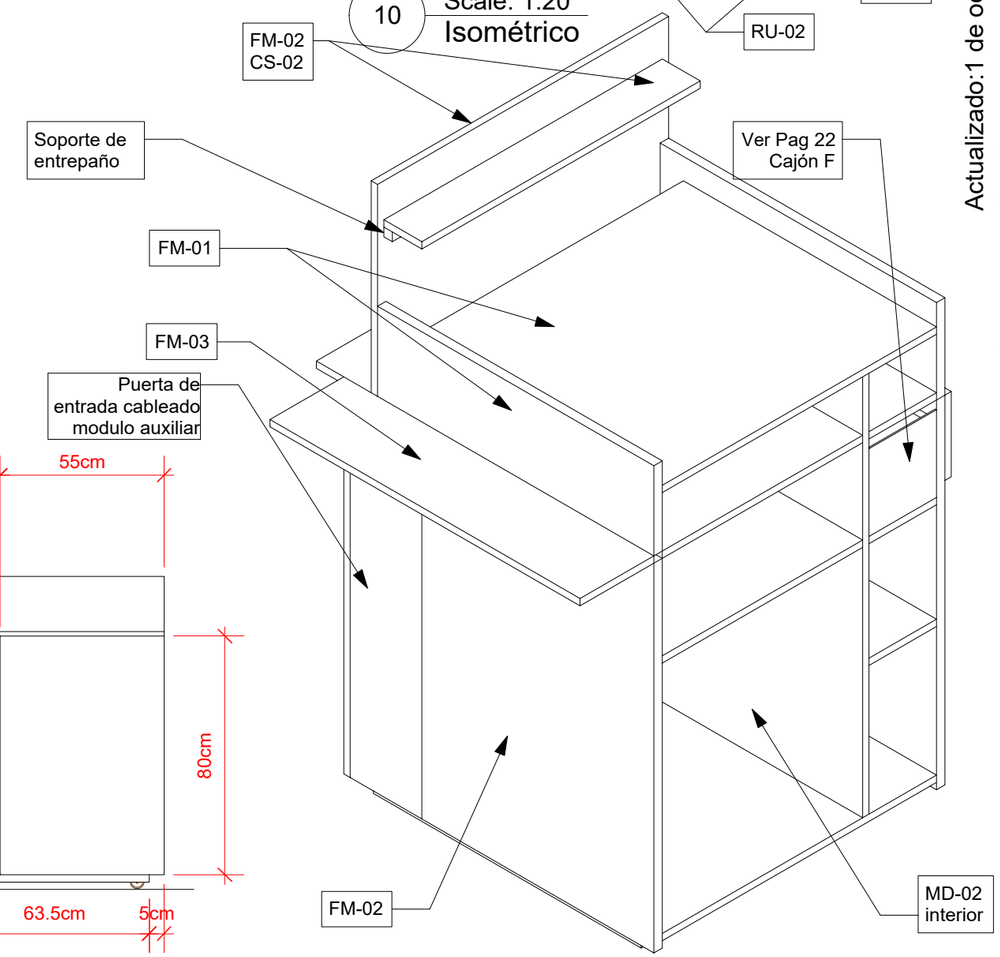

9 Isométrico Posterior
Scale: 1:10

Actualizado:1 de octubre de 2015

No.	Date	Issue Notes	Revision Notes	Zone	Appr

Date	06/05/15
Revision	Revisión
Project ID	MADI
Drawing Code	Drawing Code
CAD File Name	Muebles_Brissa
Plot Date	00/00/00
Designed By	Bianca Castillo
Drawn By	Bianca Castillo
Checked By	MA
Reviewed By	Marcelo Albertal
Submitted By	BC
Project Manager	Marcelo Albertal

Design Firm
MADI
Calle 88 #10-62 Bogota, DC, Colombia
3017867314
biancacastillog@gmail.com

Consultant
Marcelo Albertal design International

Project Title
Mobiliario BRISSA 2015

Sheet Title
BR-137 Modulo Pago Auxiliar

Scale
Ver escala de cada dibujo

Sheet No.
30
of
83

NOTA:

Verificar indicaciones en Plano Arquitectonico

Br-140 Cremallera 240 cm
Br-141 Cremallera 300 cm
Br-147 Cremallera 217 cm - Modulo servicio

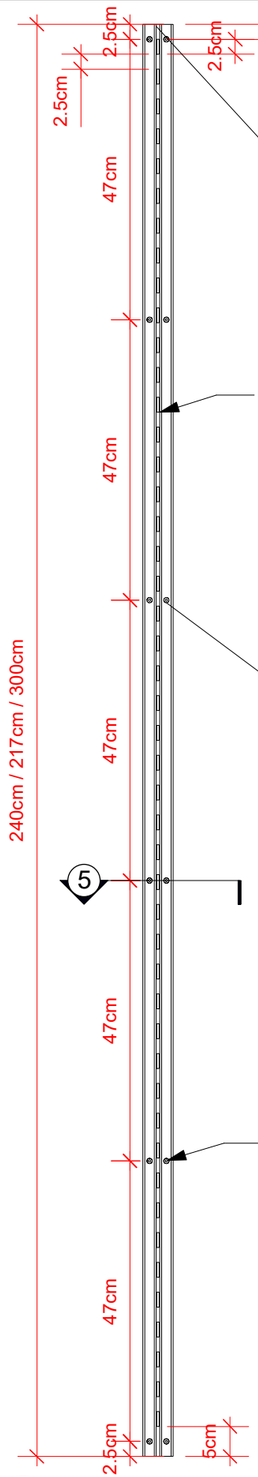

1 Vista Frontal
Scale: 1:10

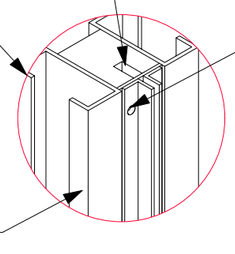

2 Detalle
Scale: 1:5

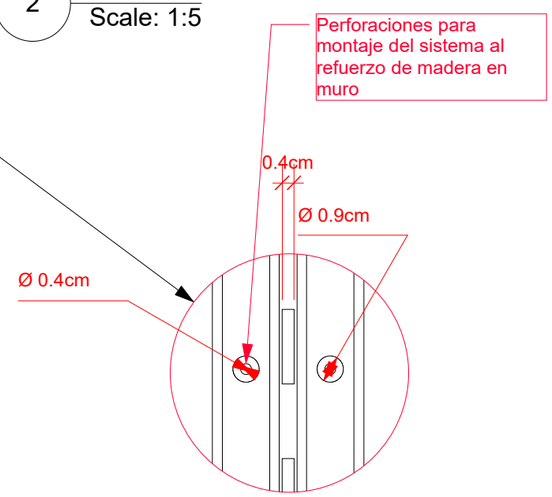

6 Detalle
Scale: 1:2

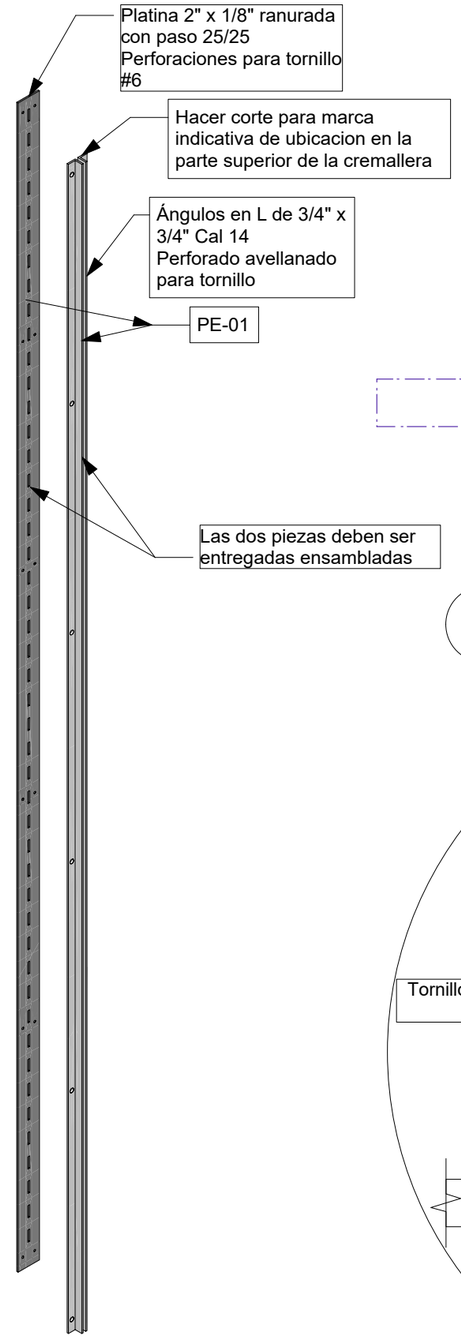

3 Despiece
Scale: 1:10

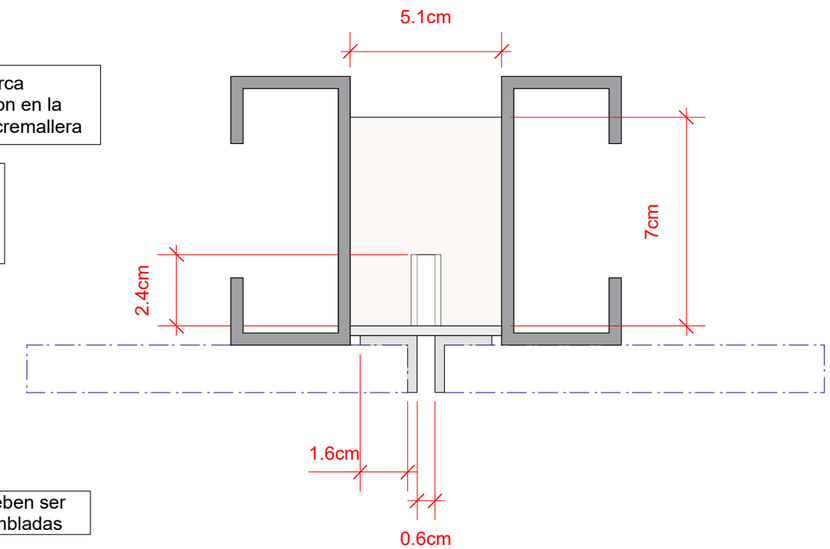

4 Vista Superior
Scale 1:2

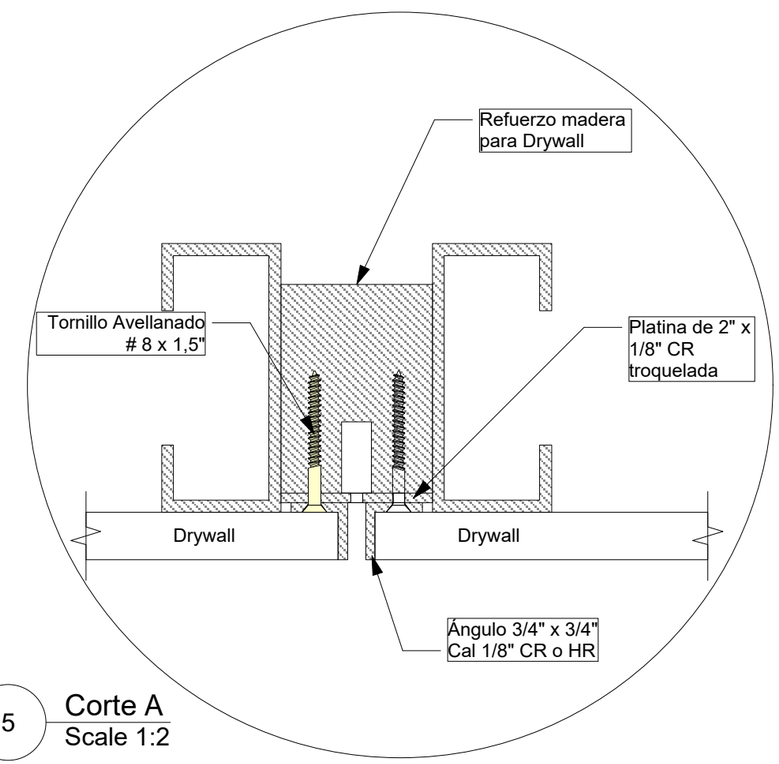

5 Corte A
Scale 1:2

Actualizado: 19 de agosto de 2015

No.	Date	Issue Notes	Revision Notes	Zone	Appr

Date	06/05/15
Revision	Revision
Project ID	MADI
Drawing Code	Drawing Code
CAD File Name	Muebles_Brissa
Revision	00/00/00
Designed By	Blanca Castillo
Drawn By	Blanca Castillo
Checked By	MA
Reviewed By	Marcelo Albertal
Submitted By	BC
Project Manager	Marcelo Albertal

Design Firm: MADI
Calle 88 #10-62 Bogota, DC, Colombia
3017867314
biancacastillog@gmail.com

Consultant: Marcelo Albertal design International

Project Title: Mobiliario BRISSA 2015

Sheet Title: BR-140 Cremallera 240
Br-141 Cremallera 300
Br-147 Cremallera 217

Scale: Ver escala de cada dibujo

Sheet No. 31 of 83

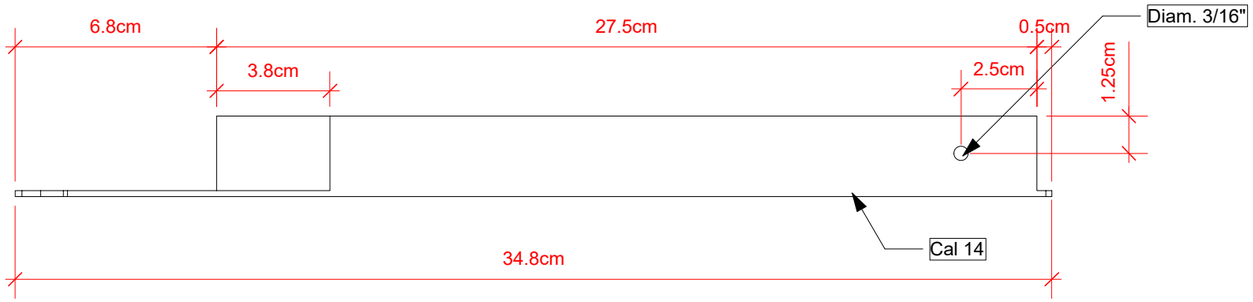

1 Vista Superior
Scale 1:2

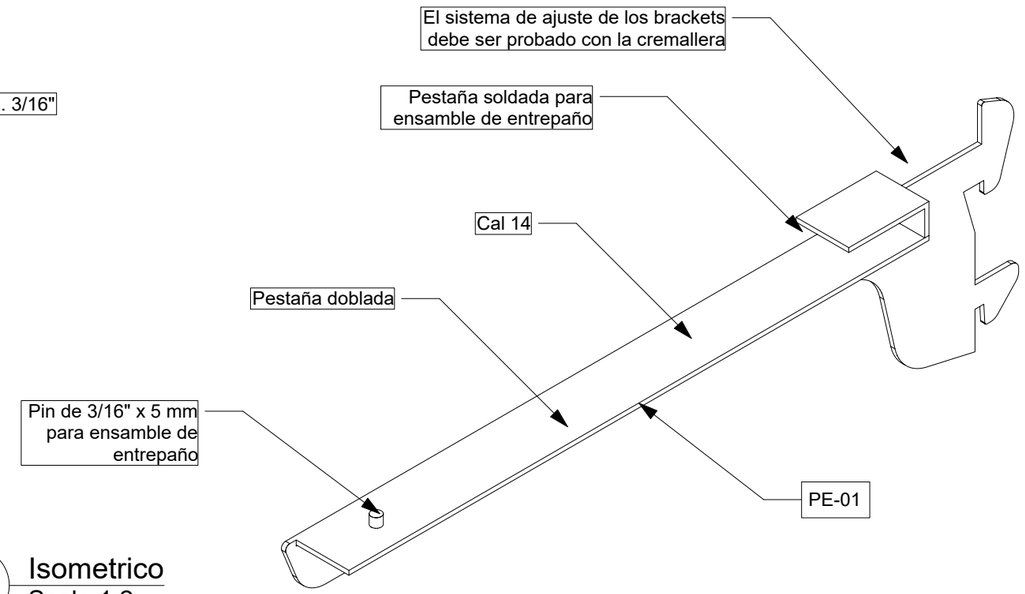

2 Isometrico
Scale 1:2

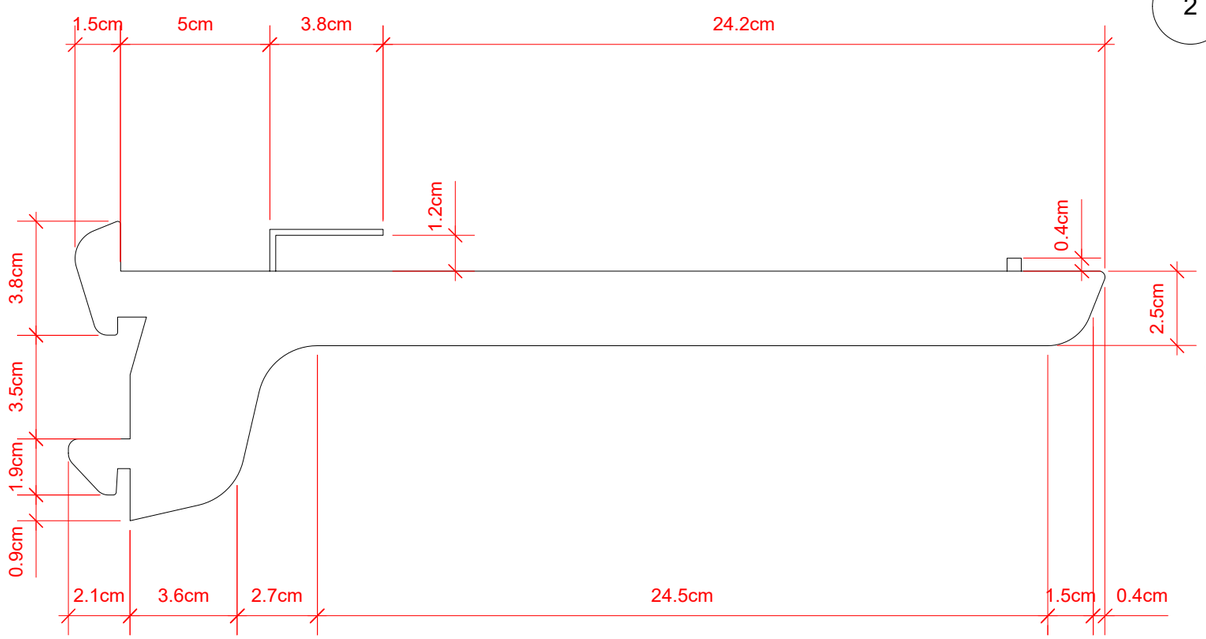

2 Vista Lateral
Scale 1:2

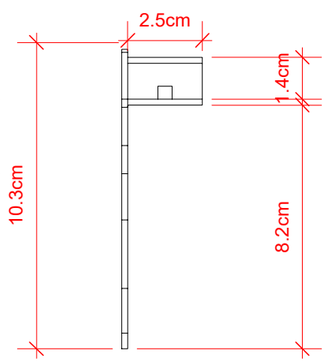

3 Vista Frontal
Scale 1:2

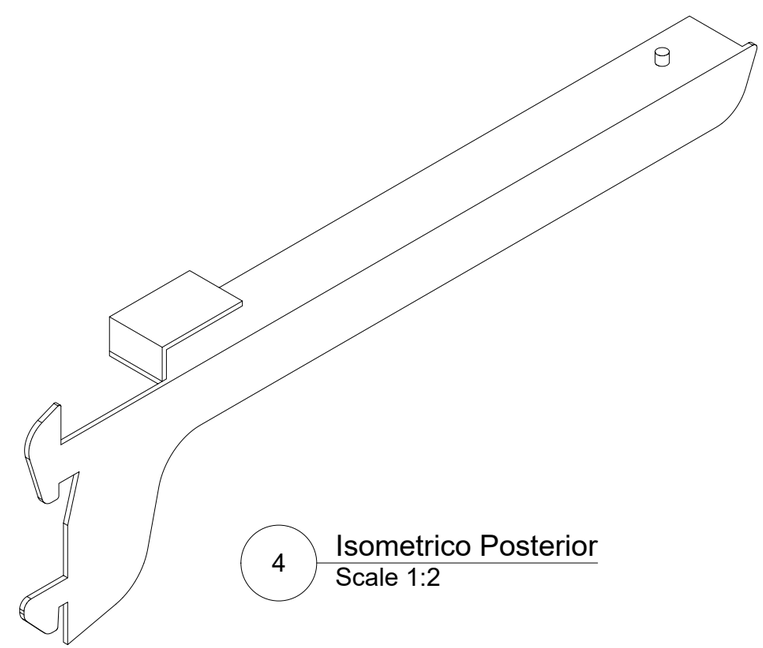

4 Isometrico Posterior
Scale 1:2

Actualizado:1 de octubre de 2015

No.	Date	Issue Notes	No.	Date	Revision Notes	Zone	Appr

Designed By: Bianca Castillo
Drawn By: Bianca Castillo
Checked By: MA
Reviewed By: Marcelo Albertal
Submitted By: BC
Project Manager: Marcelo Albertal
Date: 06/05/15
Revision: Revision
Project ID: MADI
Drawing Code: Drawing Code
CAD File Name: Muebles_Brissa
PDM Code: 00/00/00

Design Firm: MADI
Calle 88 #10-62 Bogota, DC, Colombia
3017867314
biancacastillog@gmail.com

Consultant: Marcelo Albertal design International

Project Title: Mobiliario BRISSA 2015

Sheet Title: BR-142 Soporte para entrepaño 45 Der

Scale: Ver escala de cada dibujo

Sheet No. 32 of 83

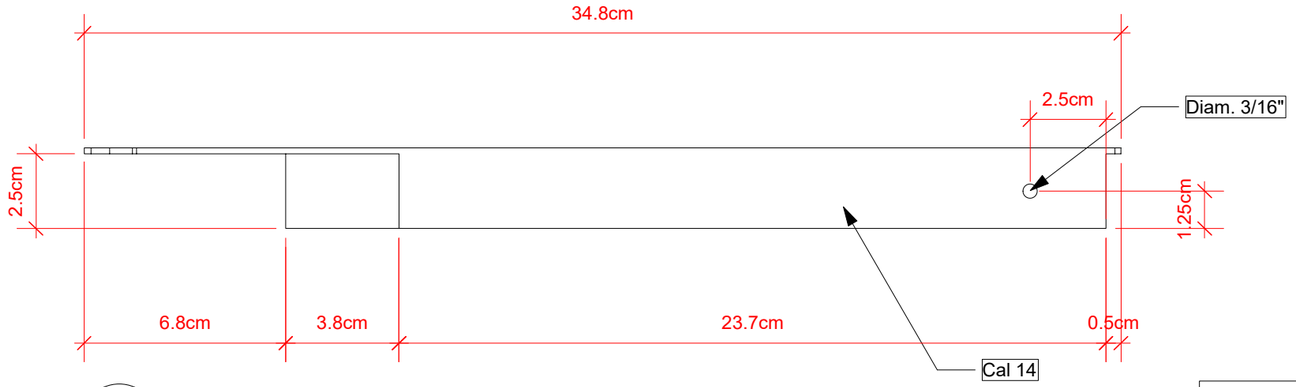

1 Vista Superior
Scale 1:2

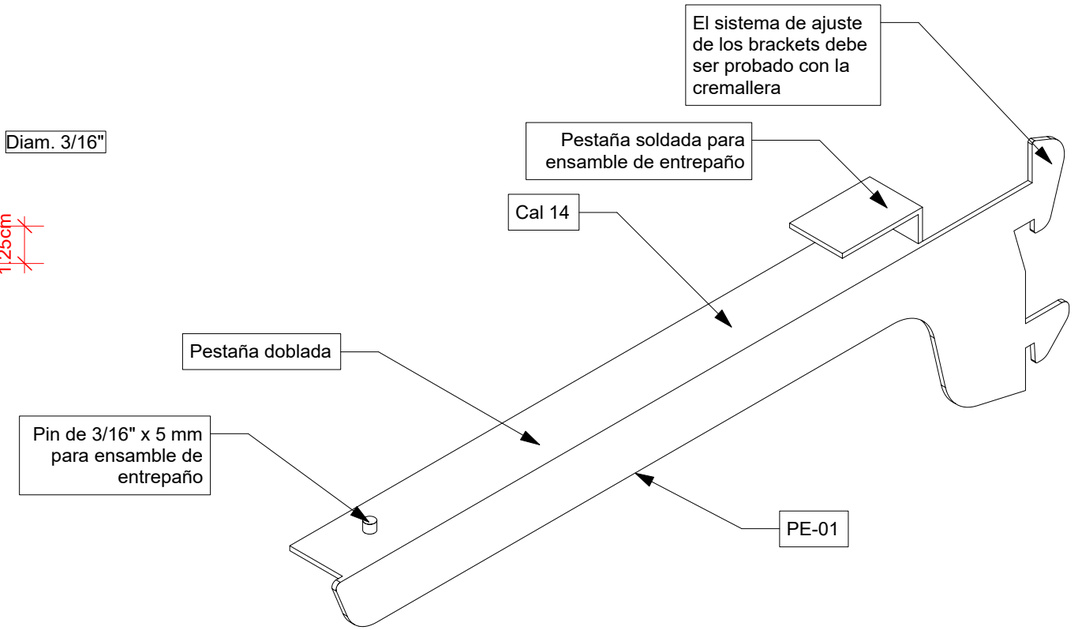

2 Isometrico
Scale 1:2

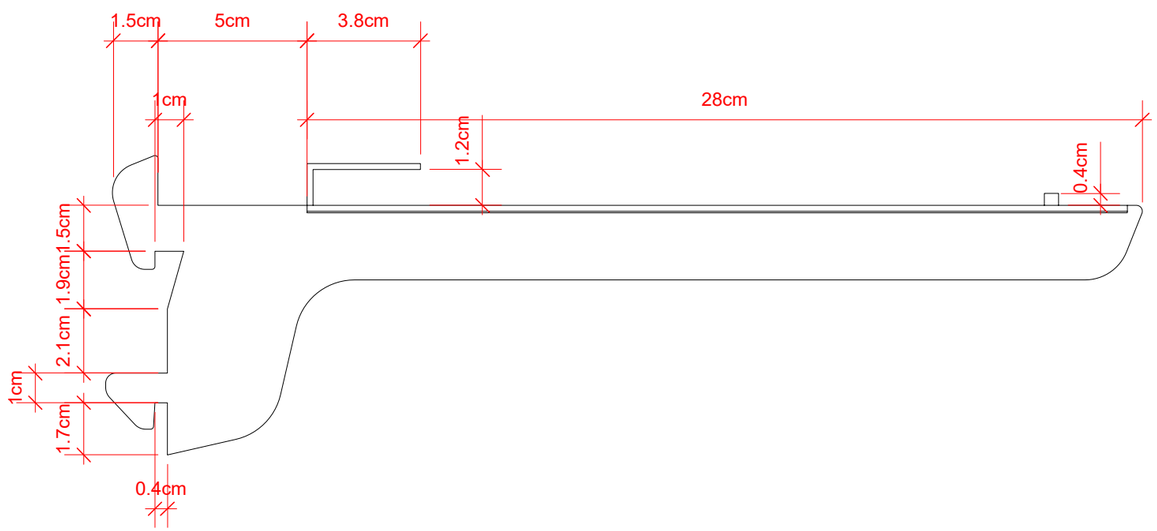

2 Vista Lateral
Scale 1:2

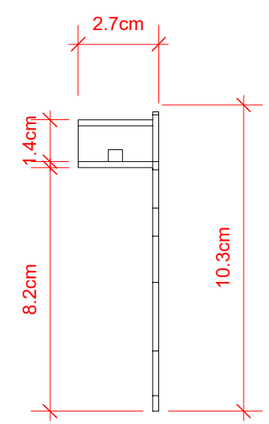

3 Vista Frontal
Scale 1:2

Actualizado:1 de octubre de 2015

Designed By	Bianca Castillo	Date	06/05/15
Drawn By	Bianca Castillo	Revision	Revision
Checked By	MA	Project ID	MADI
Reviewed By	Marcelo Albertal	Drawing Code	Drawing Code
Submitted By	BC	CAD File Name	Muebles_Brissa
Project Manager	Marcelo Albertal	Project Date	00/00/00

Design Firm
MADI
Calle 88 #10-62 Bogota, DC, Colombia
3017867314
biancacastillog@gmail.com

Consultant
Marcelo Albertal design International

Project Title
Mobiliario BRISSA
2015

Sheet Title
BR-143 Soporte para entrepaño 45 izq

Scale
Ver escala de cada dibujo

Sheet No.
33
of
83

No.	Date	Issue Notes	No.	Date	Revision Notes	Zone	Appr

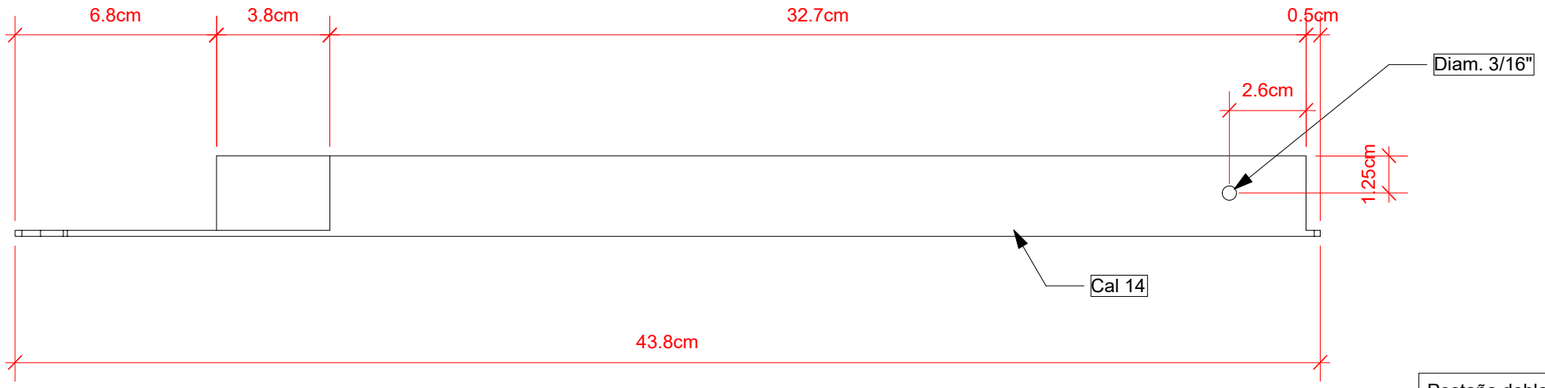

1 Vista Superior
Scale 1:2

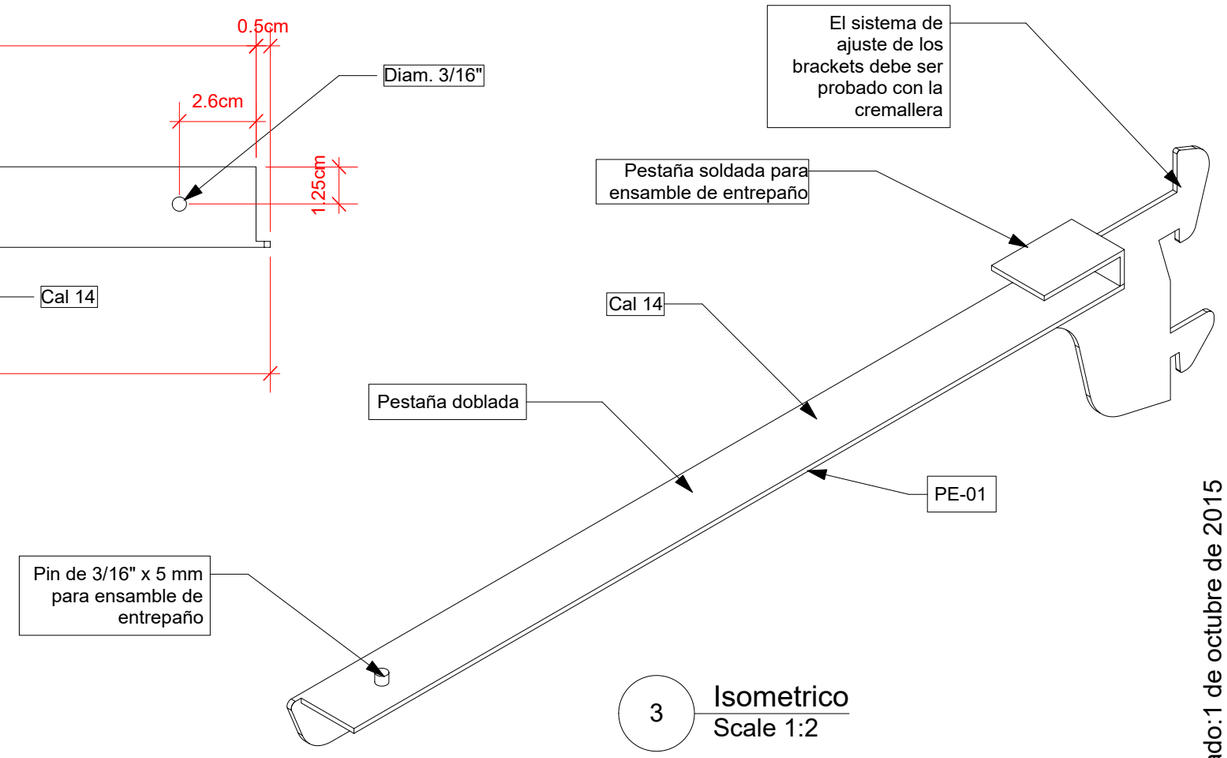

3 Isometrico
Scale 1:2

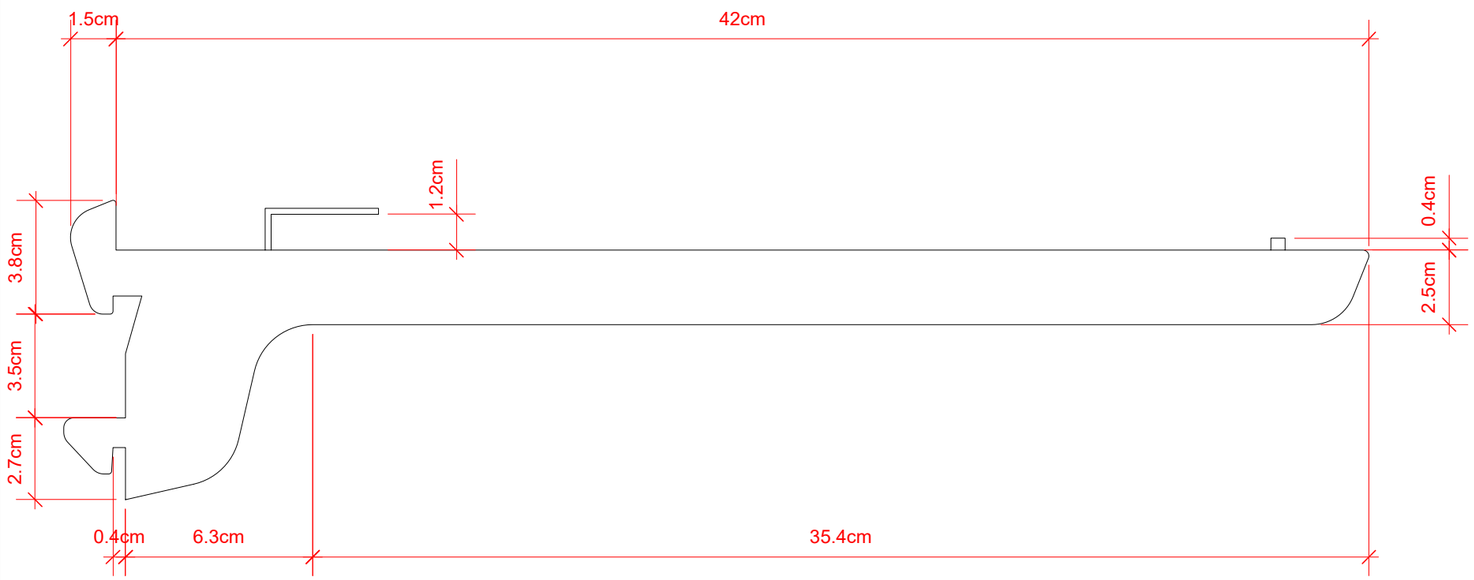

2 Vista Lateral
Scale 1:2

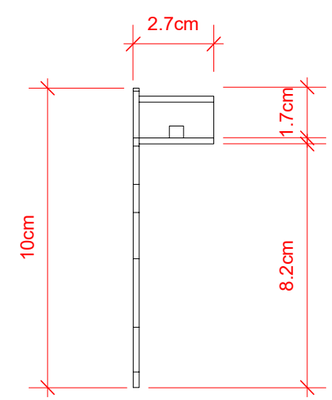

4 Vista Frontal
Scale 1:2

Actualizado:1 de octubre de 2015

Designed By: Blanca Castillo	Date: 06/05/15		
Drawn By: Blanca Castillo	Revision: Revision		
Checked By: MA	Project ID: MADI		
Reviewed By: Marcelo Albertal	Drawing Code: Drawing Code		
Submitted By: BC	CAD File Name: Muebles_Brissa		
Project Manager: Marcelo Albertal	Revision: 00/00/00		

No.	Date	No.	Date	Issue Notes	Revision Notes	Zone	Appr

Design Firm: MADI
Calle 88 #10-62 Bogota, DC, Colombia
3017867314
biancacastillog@gmail.com

Consultant: Marcelo Albertal design international

Project Title: Mobiliario BRISSA 2015

Drawing Title: BR-144 Soporte para entrepaño 60 cm Derecho

Scale: Ver escala de cada dibujo

Sheet No. 34 of 83

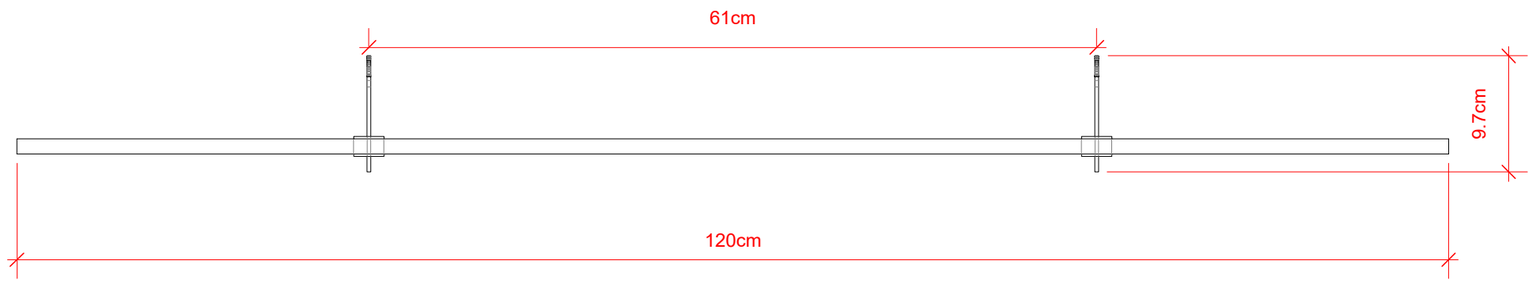

1 Vista Superior
Scale: 1:5

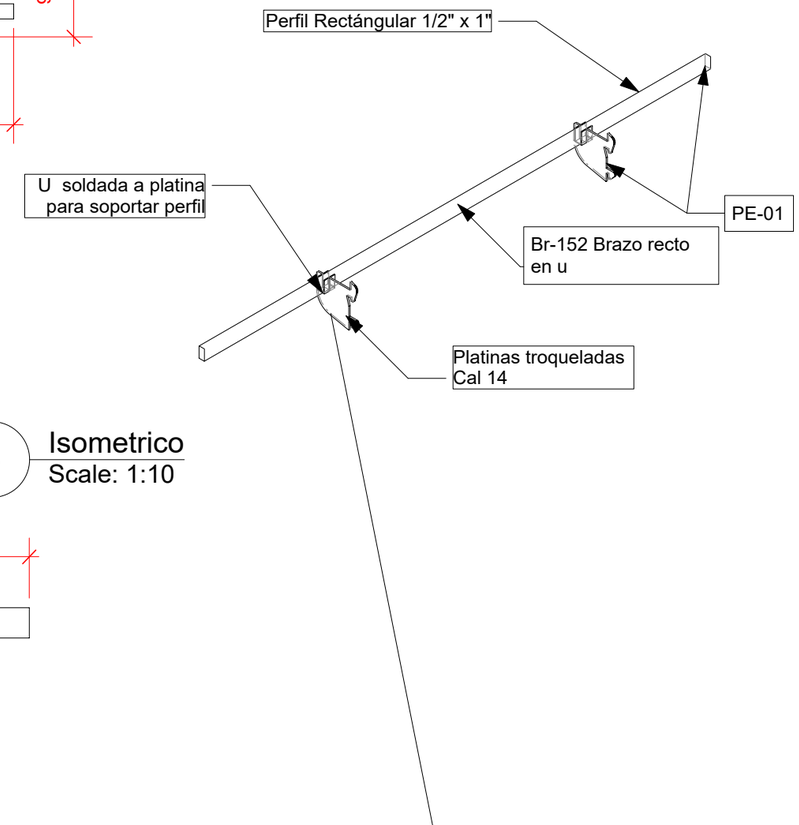

3 Isometrico
Scale: 1:10

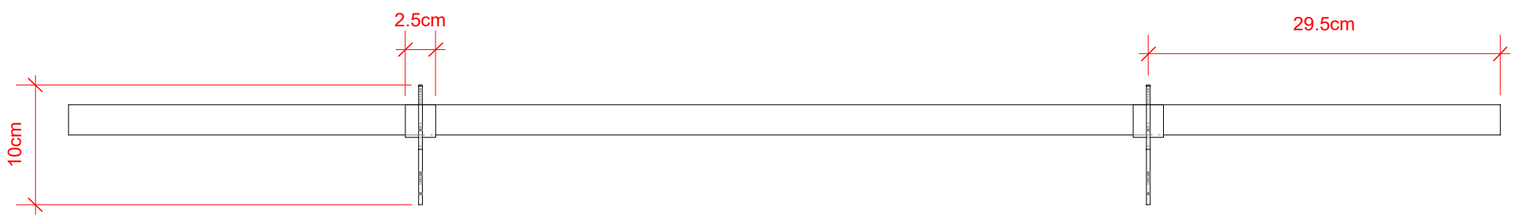

2 Vista Frontal
Scale: 1:5

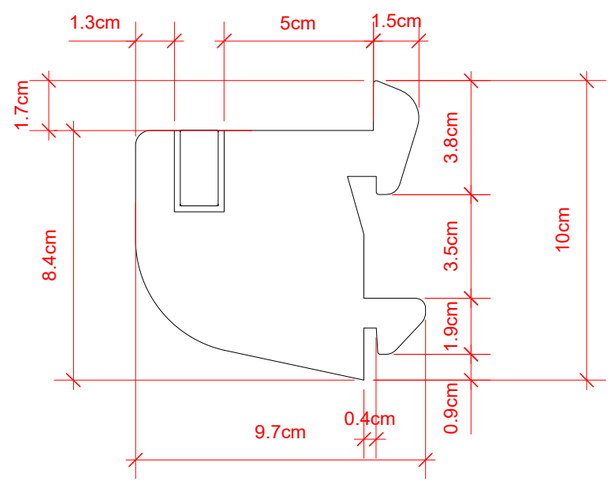

4 Vista Lateral
Scale 1:2

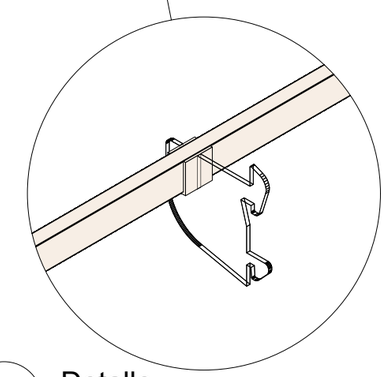

5 Detalle
Scale: 1:4

Actualizado: 19 de agosto de 2015

No.	Date	No.	Date	Issue Notes	Revision Notes	Zone	Appr

Designed By: Blanca Castillo
Drawn By: Blanca Castillo
Checked By: MA
Reviewed By: Marcelo Albertal
Submitted By: BC
Project Manager: Marcelo Albertal
Date: 06/05/15
Revision: Revision
Project ID: MADI
Drawing Code: Drawing Code
CAD File Name: Muebles_Brissa
Plot Date: 00/00/00

Design Firm: MADI
Calle 88 #10-62 Bogota, DC, Colombia
3017867314
biancacastillog@gmail.com

Consultant: Marcelo Albertal design International

Project Title: Mobiliario BRISSA 2015

Sheet Title: BR-145 Barra corta

Scale: Ver escala de cada dibujo

Sheet No. 35 of 83

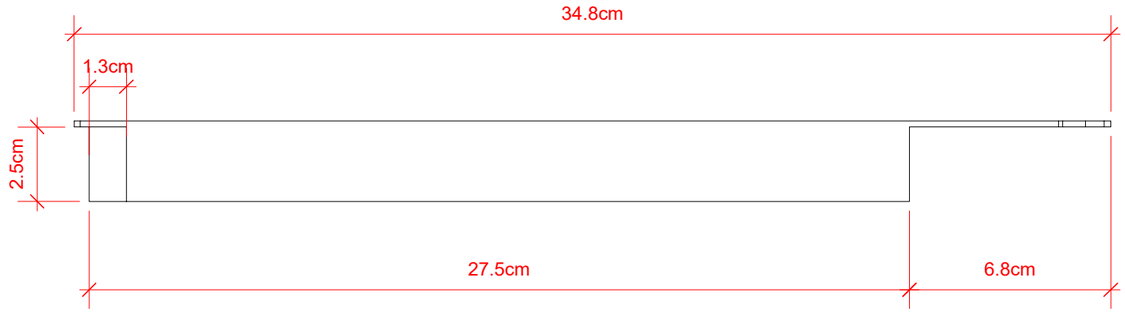

1 Vista Superior
Scale 1:2

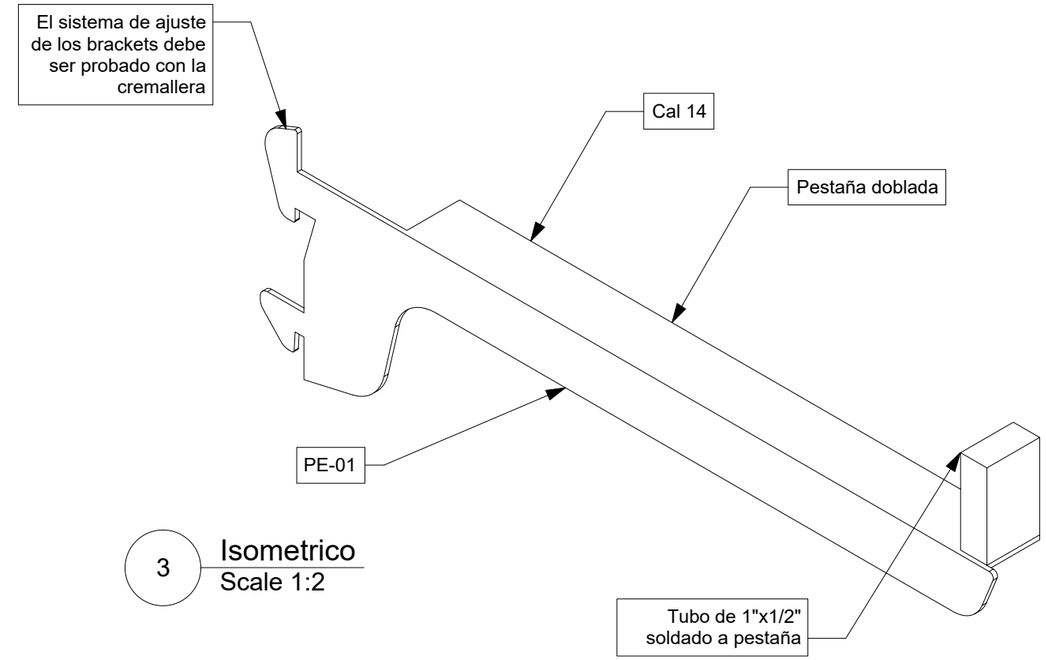

3 Isometrico
Scale 1:2

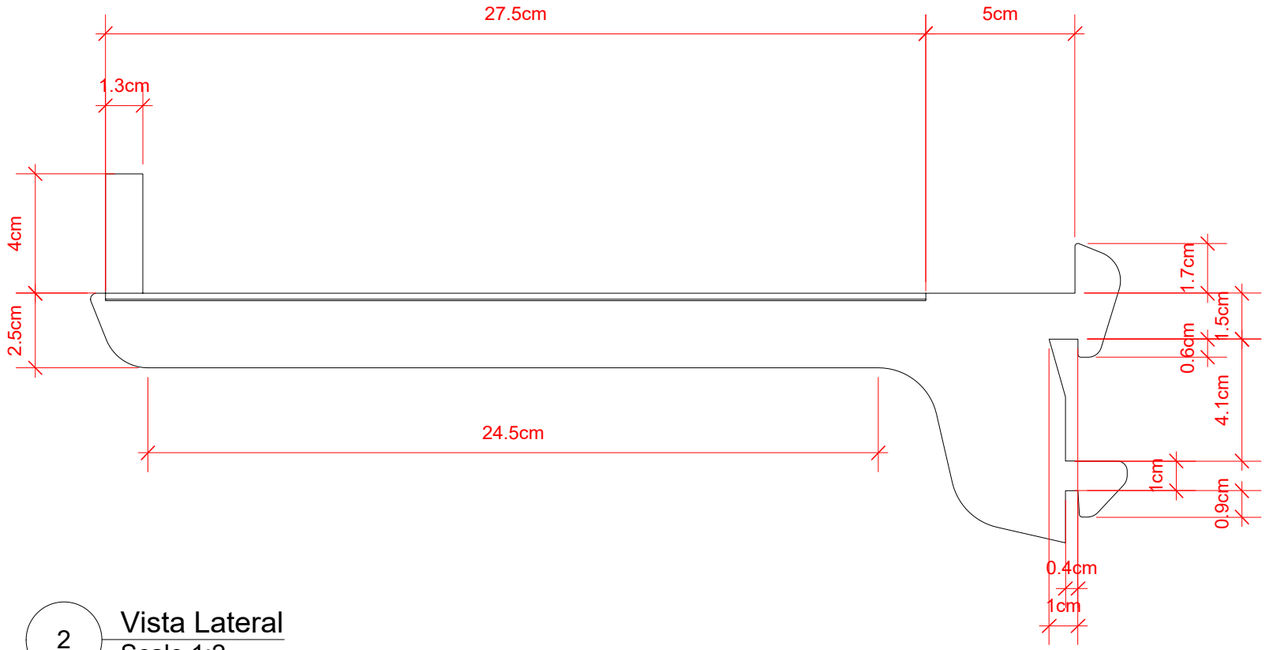

2 Vista Lateral
Scale 1:2

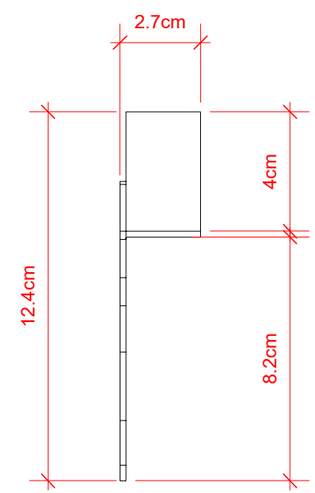

4 Vista Frontal
Scale 1:2

Actualizado: 19 de agosto de 2015

No.	Date	Issue Notes	No.	Date	Revision Notes	Zone	Appr

Designed By: Bianca Castillo
Drawn By: Bianca Castillo
Checked By: MA
Reviewed By: Marcelo Albertal
Submitted By: BC
Project Manager: Marcelo Albertal
Date: 06/05/15
Revision: Revisión
Project ID: MADI
Drawing Code: Drawing Code
CAD File Name: Muebles_Brissa
PAGE Code: 00/00/00

Design Firm: MADI
Calle 88 #10-62 Bogota, DC, Colombia
3017867314
biancacastillog@gmail.com

Consultant: Marcelo Albertal design International

Project Title: Mobiliario BRISSA 2015

Sheet Title: BR-146 Soporte para armario

Scale: Ver escala de cada dibujo

Sheet No. 36 of 83

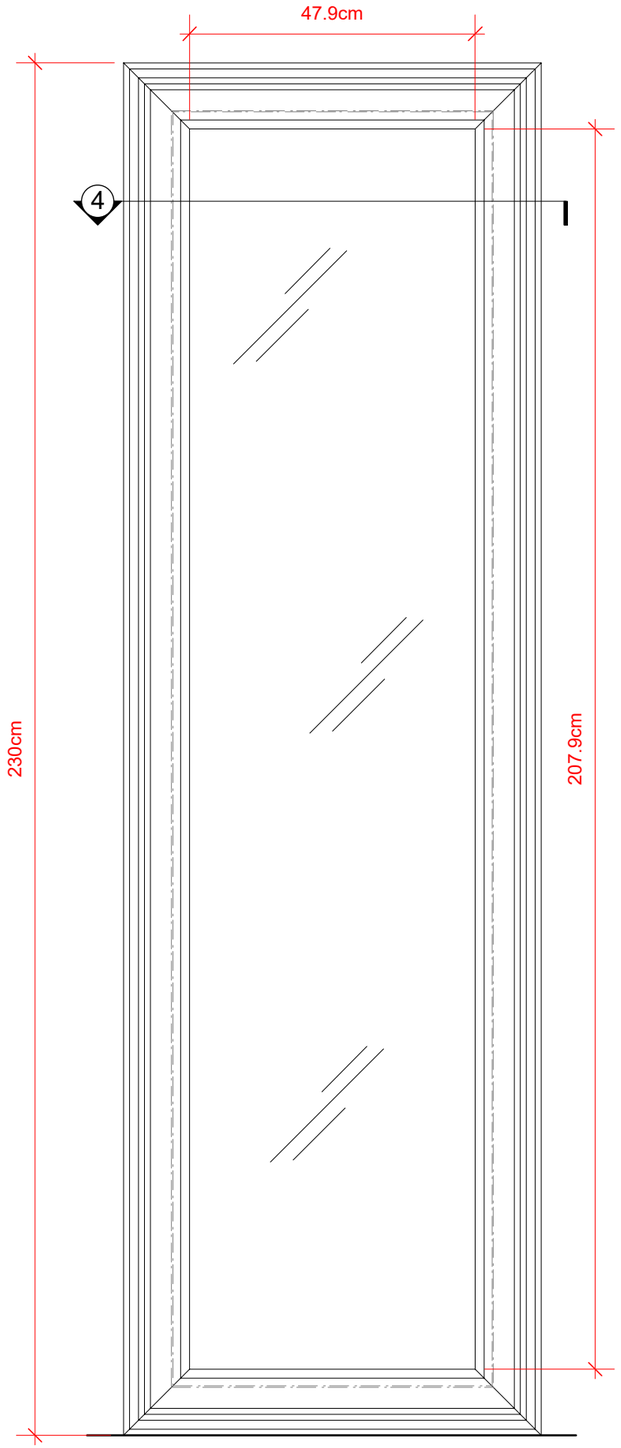

1 Vista Frontal
Scale: 1:10

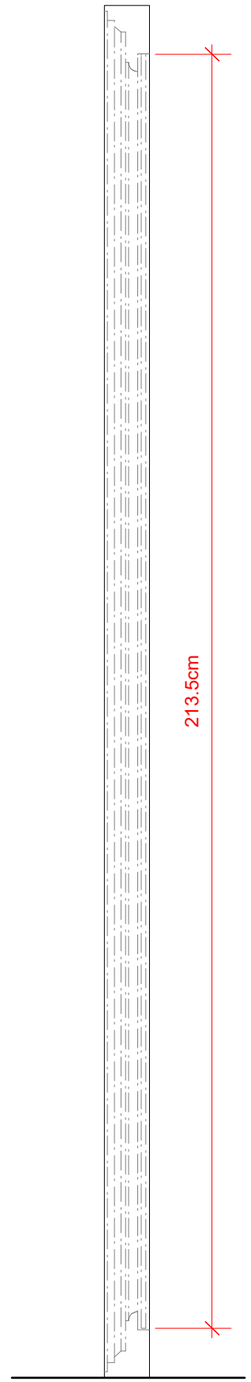

2 Vista Lateral
Scale: 1:10

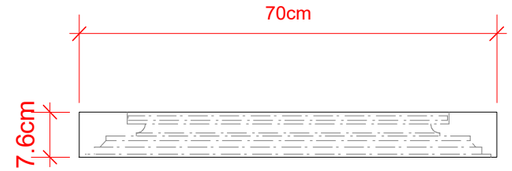

3 Vista Superior
Scale: 1:10

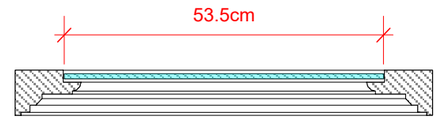

4 Corte
Scale: 1:10

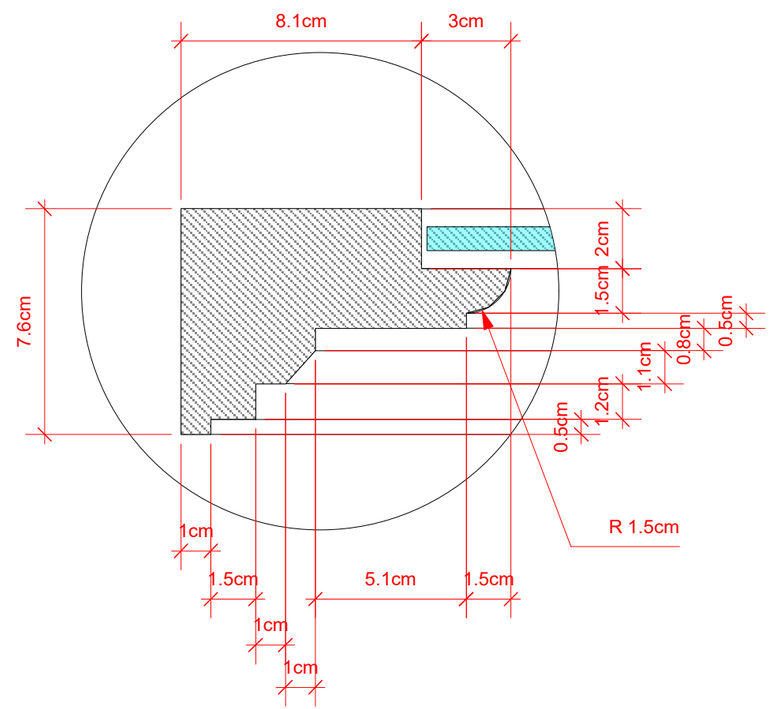

5 Detalle Corte
Scale 1:2

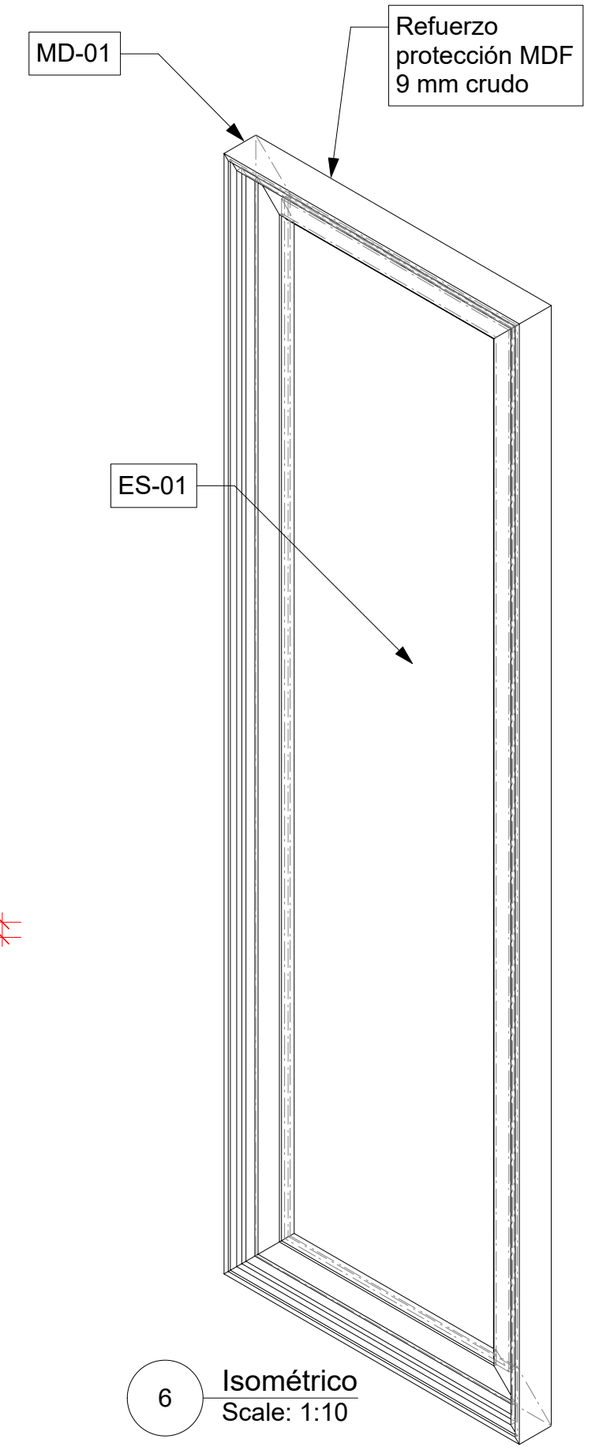

6 Isométrico
Scale: 1:10

Actualizado: 19 de agosto de 2015

No.	Date	Issue Notes	No.	Date	Revision Notes	Zone	Appr

Designed By: Blanca Castillo
Date: 06/05/15
Drawn By: Blanca Castillo
Revision: Revisión
Checked By: MA
Project ID: MADI
Reviewed By: Marcelo Albertal
Drawing Code
Submitted By: BC
CAD File Name: Muebles_Brissa
Project Manager: Marcelo Albertal
PLA Code: 00/00/00

Design Firm
MADI
Calle 88 #10-62 Bogota, DC, Colombia
3017867314
biancacastillog@gmail.com
Consultant
Marcelo Albertal design international

Project Title
Mobiliario BRISSA 2015

Sheet Title
BR-150 Espejo

Scale
Ver escala de cada dibujo

Sheet No.
37
of
83

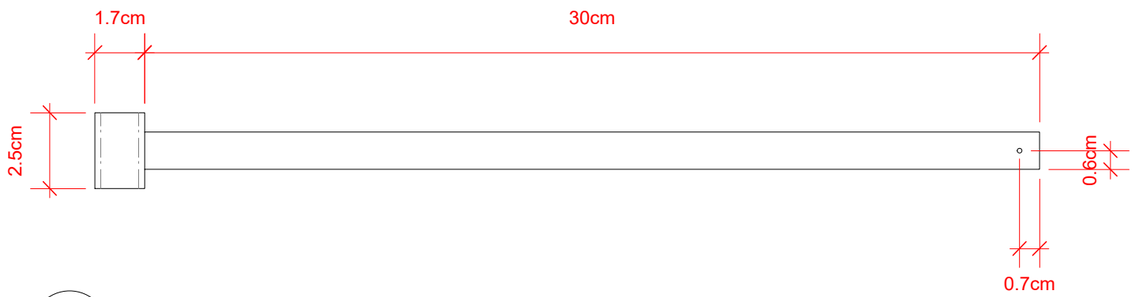

1 Vista Superior
Scale 1:2

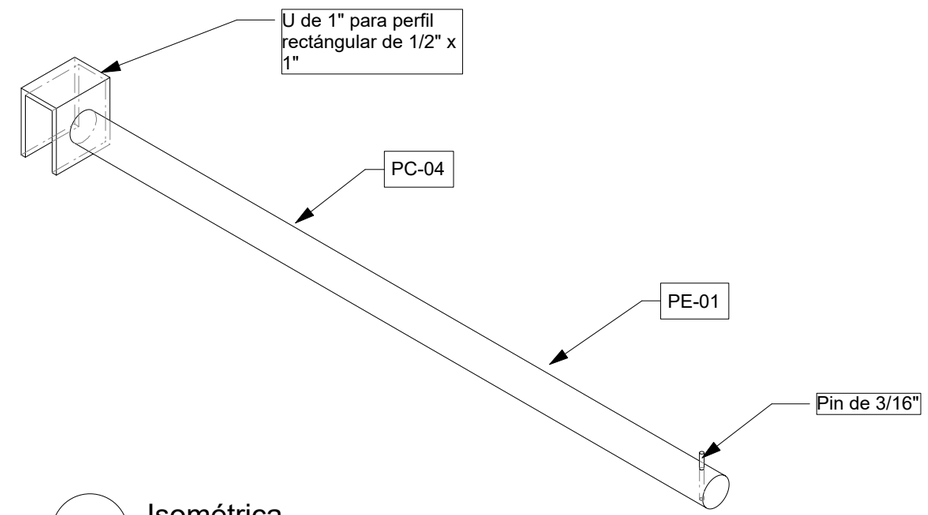

3 Isométrica
Scale 1:2

2 Vista Lateral
Scale 1:2

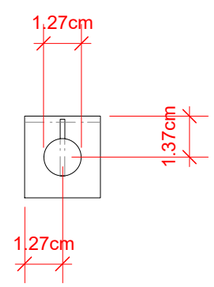

4 Vista Frontal
Scale 1:2

Actualizado: 19 de agosto de 2015

No.	Date	Issue Notes	No.	Date	Revision Notes	Zone	Appr

Date 06/05/15
Revision Revisión
Project ID MADI
Drawing Code Drawing Code
CAD File Name Muebles_Brissa
Project Date 00/00/00

Designed By Blanca Castillo
Drawn By Blanca Castillo
Checked By MA
Reviewed By Marcelo Albertal
Submitted By BC
Project Manager Marcelo Albertal

Design Firm
MADI
Calle 88 #10-62 Bogota, DC, Colombia
3017867314
biancacastillog@gmail.com

Consultant
Marcelo Albertal design International

Project Title
Mobiliario BRISSA
2015

Sheet Title
BR-152 Brazo recto en U

Scale
Ver escala de cada dibujo

Sheet No.
38
of
83

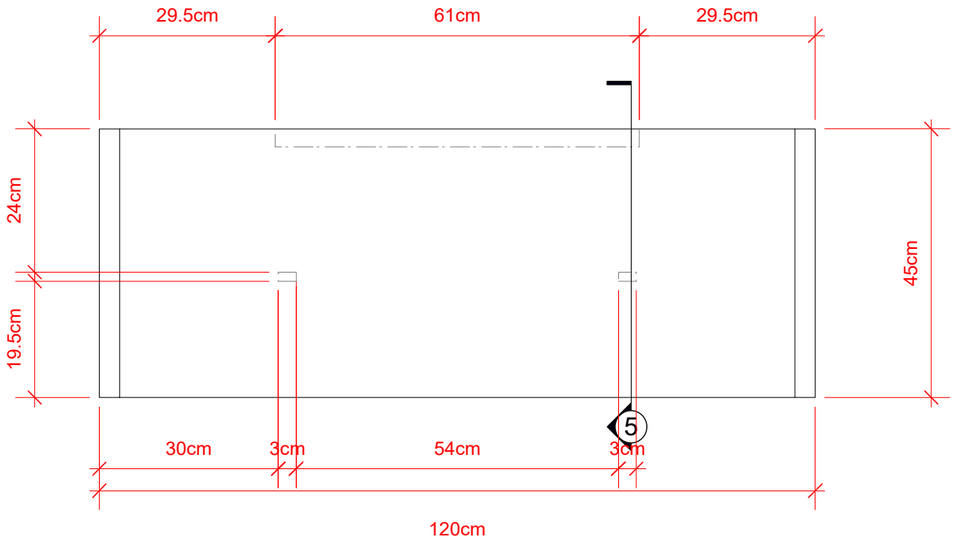

1 Vista Superior
Scale: 1:10

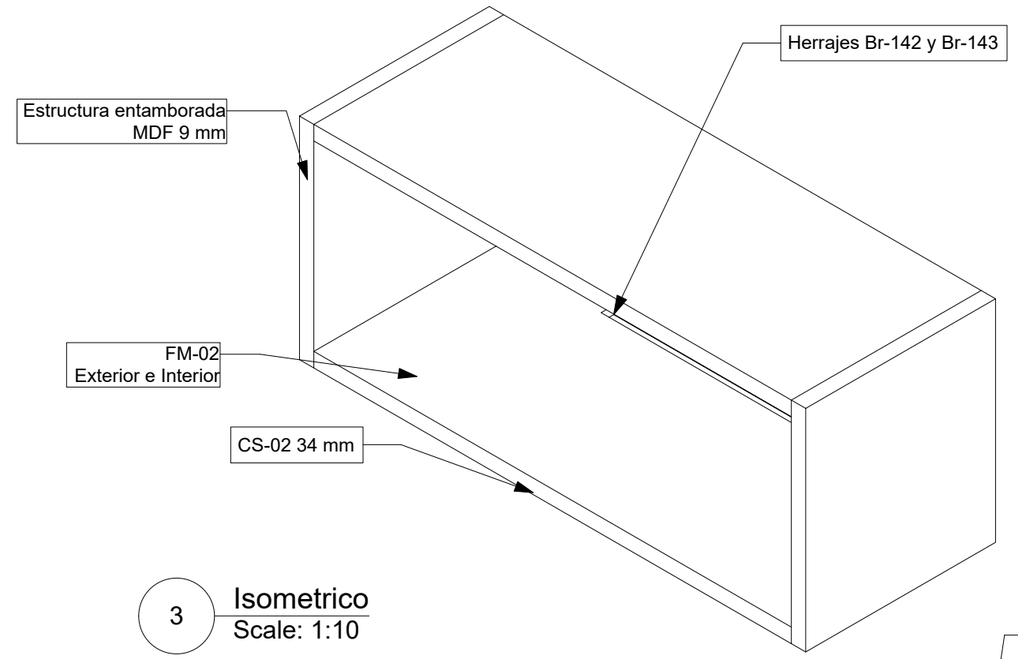

3 Isometrico
Scale: 1:10

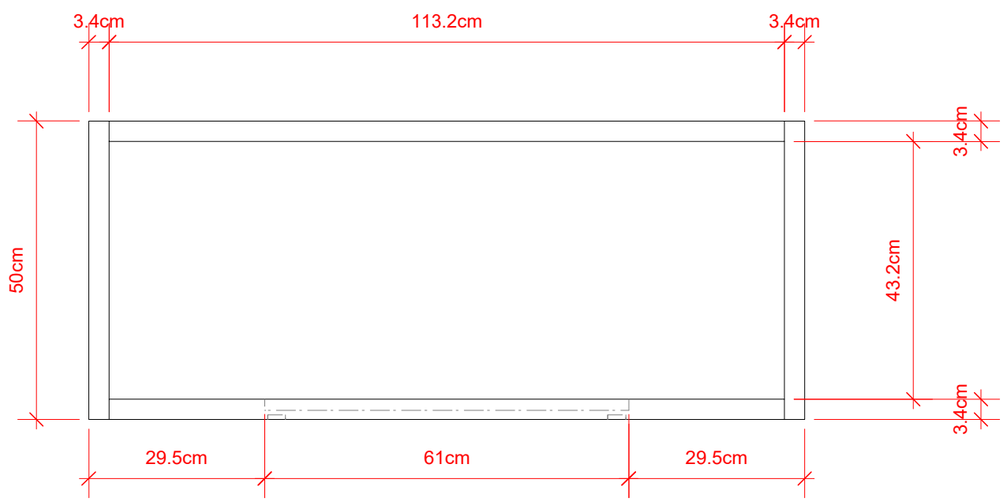

2 Vista Frontal
Scale: 1:10

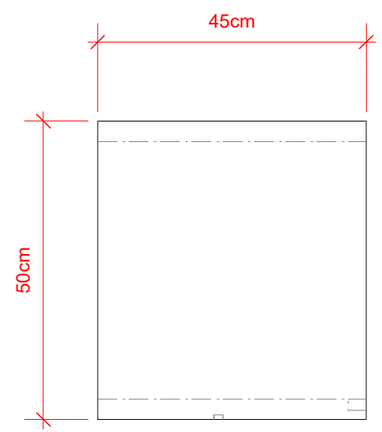

4 Vista Lateral
Scale: 1:10

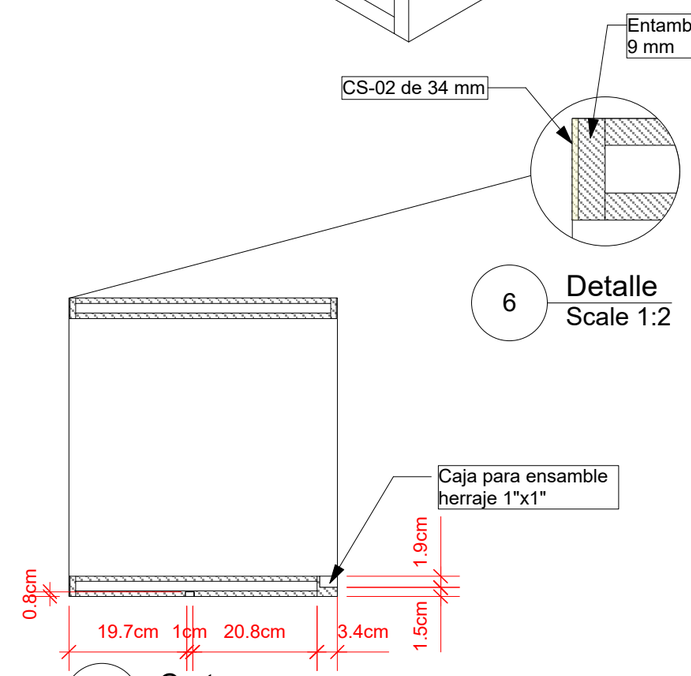

6 Detalle
Scale 1:2

5 Corte
Scale: 1:10

Actualizado: 19 de agosto de 2015

No.	Date	Issue Notes	Revision Notes	Zone	Appr

Date	06/05/15
Revision	Revisión
Project ID	MADI
Drawing Code	Drawing Code
CAD File Name	Muebles_Brissa
Project Date	00/00/00
Designed By	Bianca Castillo
Drawn By	Bianca Castillo
Checked By	MA
Reviewed By	Marcelo Albertal
Submitted By	BC
Project Manager	Marcelo Albertal

Design Firm
MADI
Calle 88 #10-62 Bogota, DC, Colombia
3017867314
biancacastillog@gmail.com

Consultant
Marcelo Albertal design International

Project Title
Mobiliario BRISSA
2015

Sheet Title
BR-153 Marco madera 12050

Scale
Ver escala de cada dibujo

Sheet No.
39
of
83

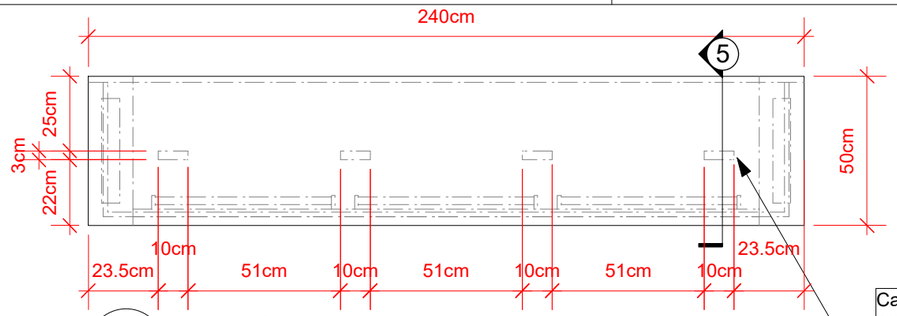

1 Vista Superior
Scale: 1:20

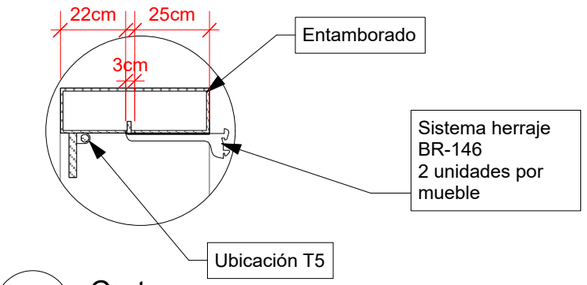

3 Corte
Scale: 1:20

Ver sistema de armado y ensamble

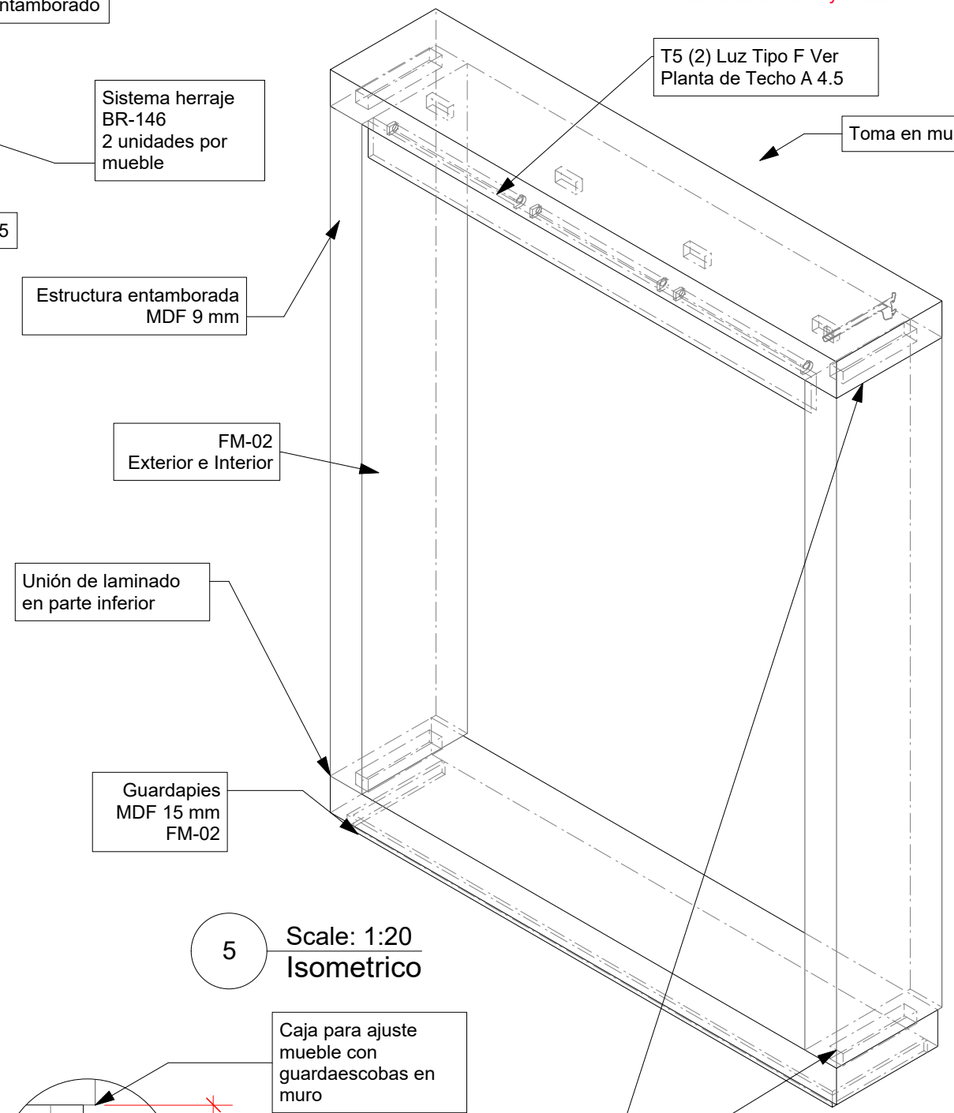

5 Scale: 1:20
Isometrico

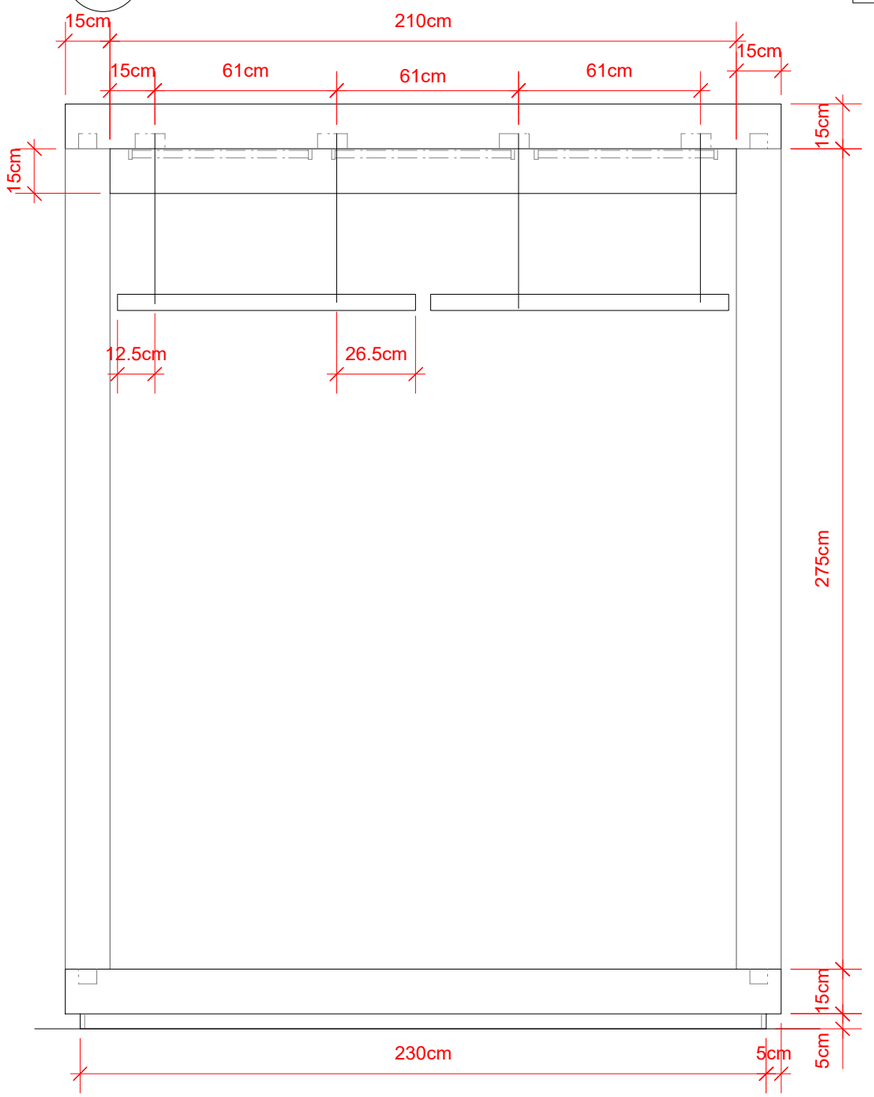

2 Vista Frontal
Scale: 1:20

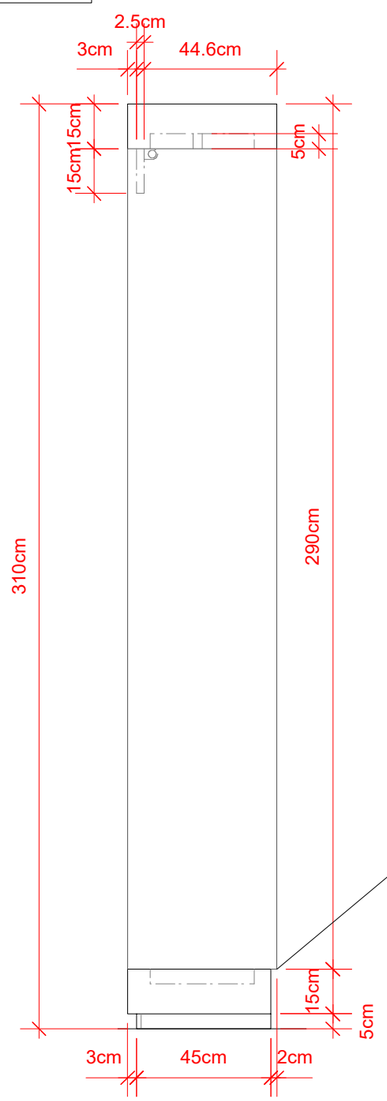

4 Scale: 1:20
Vista Lateral

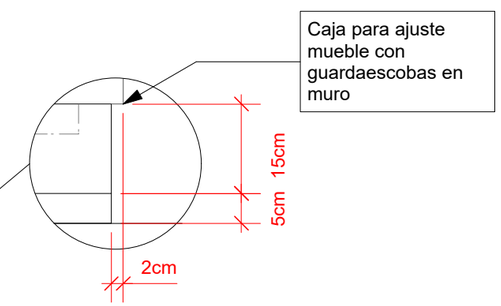

6 Detalle guardapies trasero
Scale: 1:10

Actualizado:1 de octubre de 2015

Date	06/05/15
Revision	Revision
Project ID	MADI
Drawing Code	Drawing Code
CAD File Name	Muebles_Brissa
Plot Date	00/00/00
Designed By	Blanca Castillo
Drawn By	Blanca Castillo
Checked By	MA
Reviewed By	Marcelo Albertal
Submitted By	BC
Project Manager	Marcelo Albertal

Design Firm
MADI
Calle 88 #10-62 Bogota, DC, Colombia
3017867314
biancacastillog@gmail.com

Consultant
Marcelo Albertal design international

Project Title
Mobiliario BRISSA 2015

Sheet Title
BR-155 Armario 310x240

Scale
Ver escala de cada dibujo

Sheet No.
40
of
83

Ver sistema de armado y ensamble

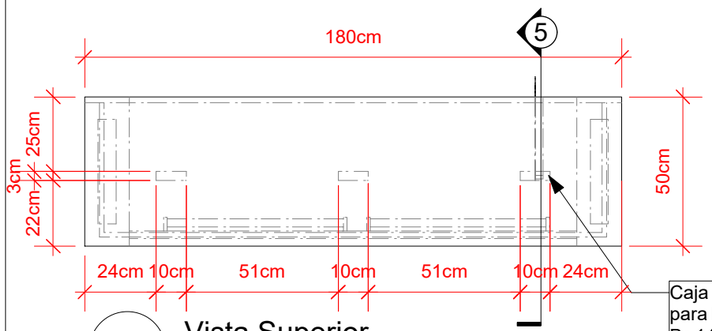

1 Vista Superior
Scale: 1:20

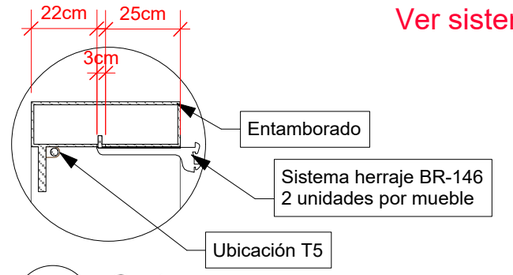

3 Corte
Scale: 1:20

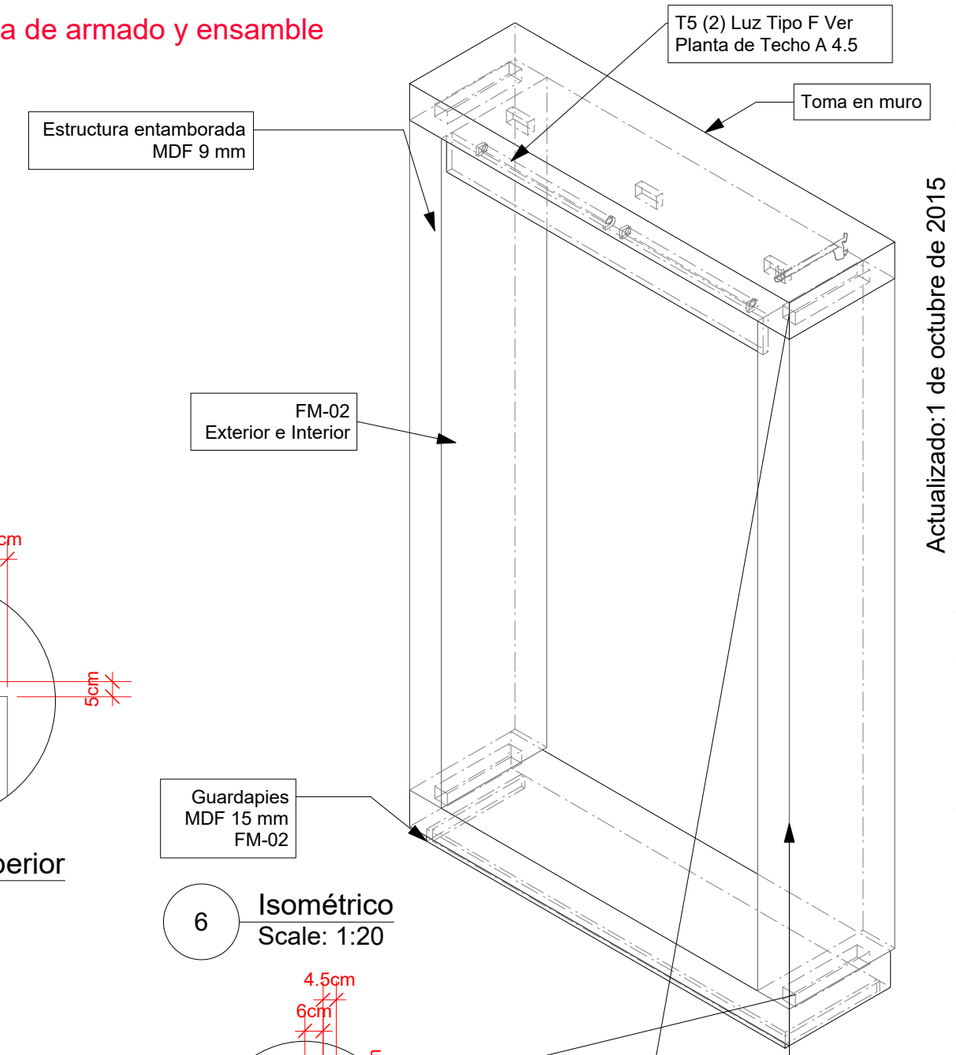

6 Isométrico
Scale: 1:20

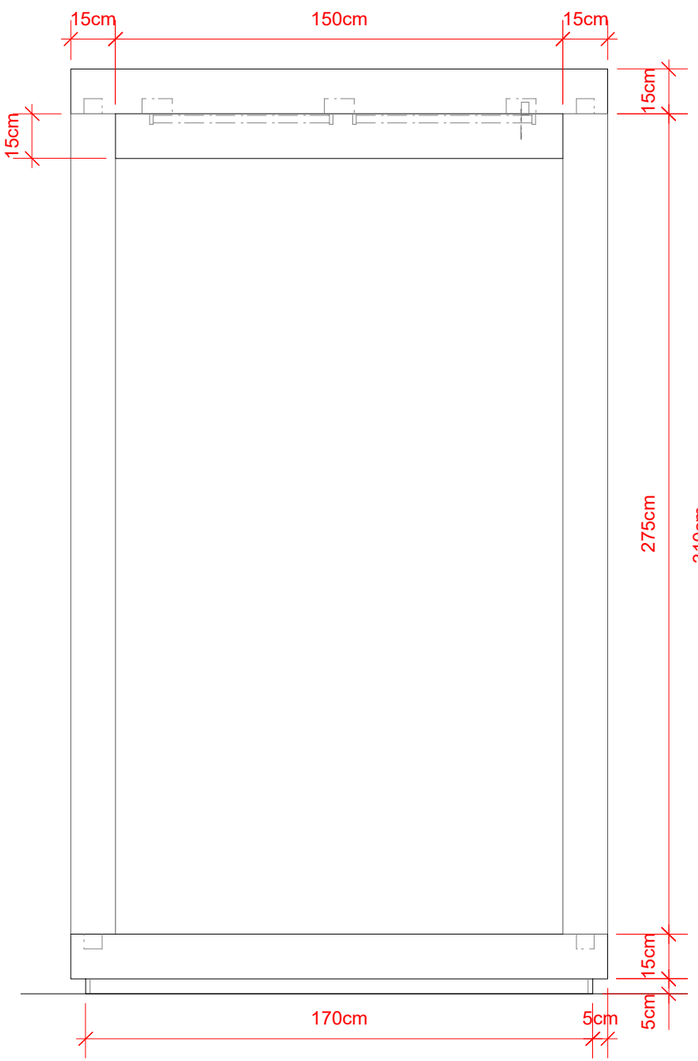

2 Vista Frontal
Scale: 1:20

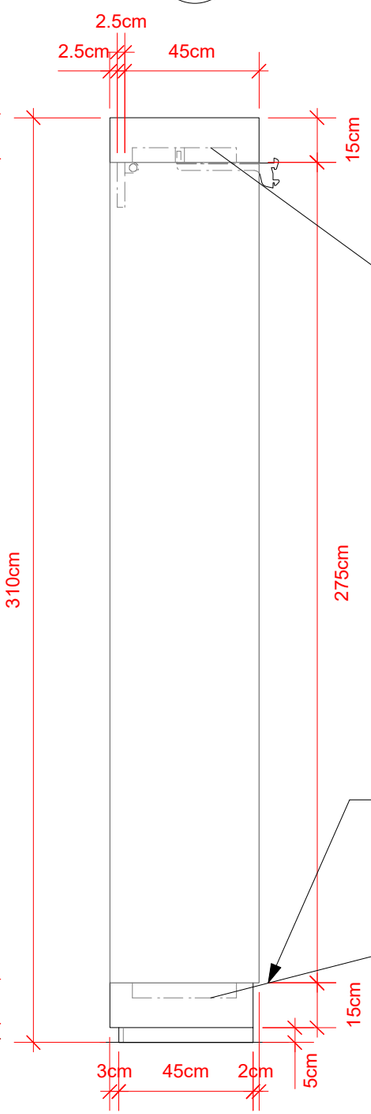

4 Vista Lateral
Scale: 1:20

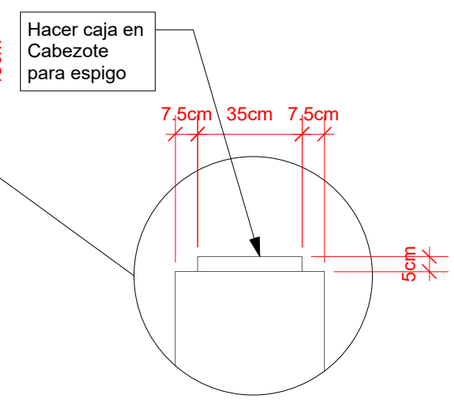

5 Espigo superior
Scale: 1:20

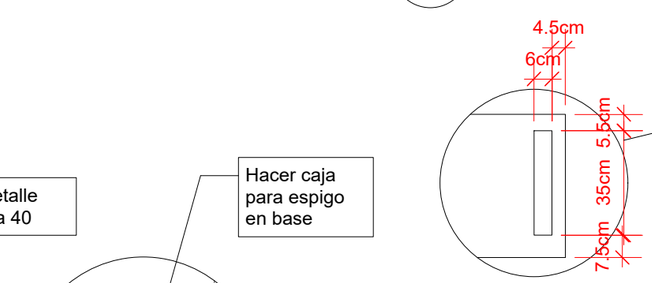

8 Vista Superior Caja Base
Scale: 1:20

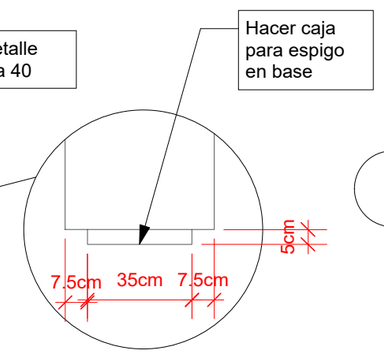

7 Espigo inferior
Scale: 1:20

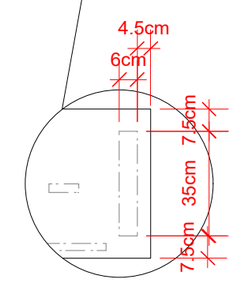

9 Vista Sup. Caja Cebzote
Scale: 1:20

Actualizado:1 de octubre de 2015

No.	Date	No.	Issue Notes	Date	Revision Notes	Zone	Appr

Designed By: Bianca Castillo
Drawn By: Bianca Castillo
Checked By: MA
Reviewed By: Marcelo Albertal
Submitted By: BC
Project Manager: Marcelo Albertal
Date: 06/05/15
Revision: Revisión
Project ID: MADI
Drawing Code: Drawing Code
CAD File Name: Muebles_Brissa
PAX/Code: 00/00/00

Design Firm: MADI
Calle 88 #10-62 Bogota, DC, Colombia
3017867314
biancacastillog@gmail.com

Consultant: Marcelo Albertal design International

Project Title: Mobiliario BRISSA 2015

Sheet Title: BR-156 Armario 310x180

Scale: Ver escala de cada dibujo

Sheet No. 41 of 83

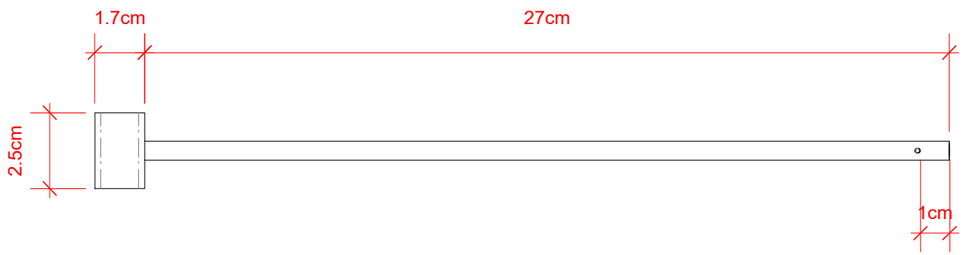

1 Vista Superior
Scale 1:2

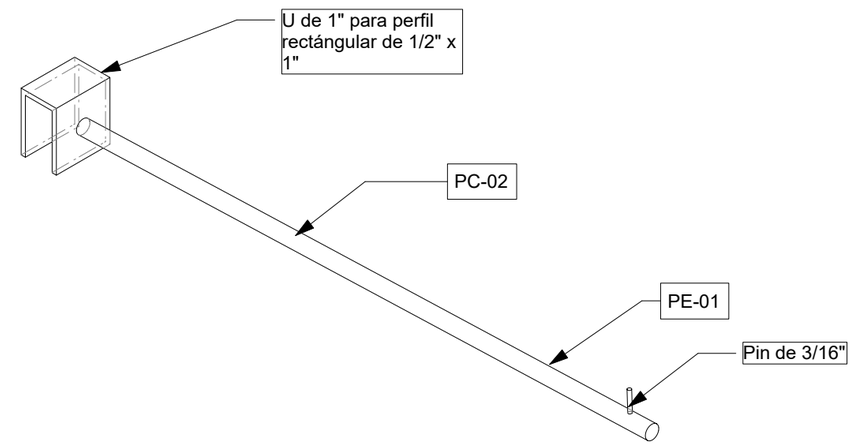

3 Isométrica
Scale 1:2

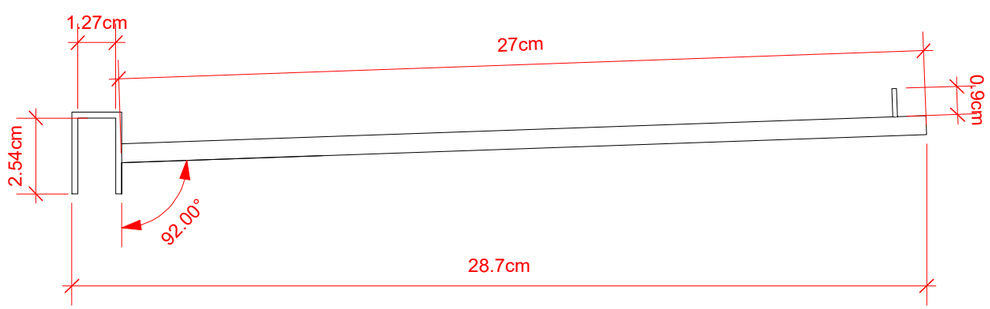

2 Vista Lateral
Scale 1:2

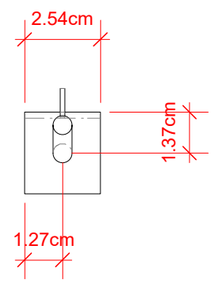

4 Vista Frontal
Scale 1:2

Actualizado: 19 de agosto de 2015

No.	Date	Issue Notes	Revision Notes	Zone	Appr

Date	06/05/15
Revision	Revisión
Project ID	MADI
Drawing Code	Drawing Code
CAD File Name	Muebles_Brissa
PAPER SIZE	00/00/00

Designed By	Bianca Castillo
Drawn By	Bianca Castillo
Checked By	MA
Reviewed By	Marcelo Albertal
Submitted By	BC
Project Manager	Marcelo Albertal

Design Firm
MADI
Calle 88 #10-62 Bogota, DC, Colombia
3017867314
biancacastillog@gmail.com

Consultant
Marcelo Albertal design International

Project Title
Mobiliario BRISSA
2015

Sheet Title
BR-157 Ganchera

Scale
Ver escala de cada dibujo

Sheet No.
42
of
83

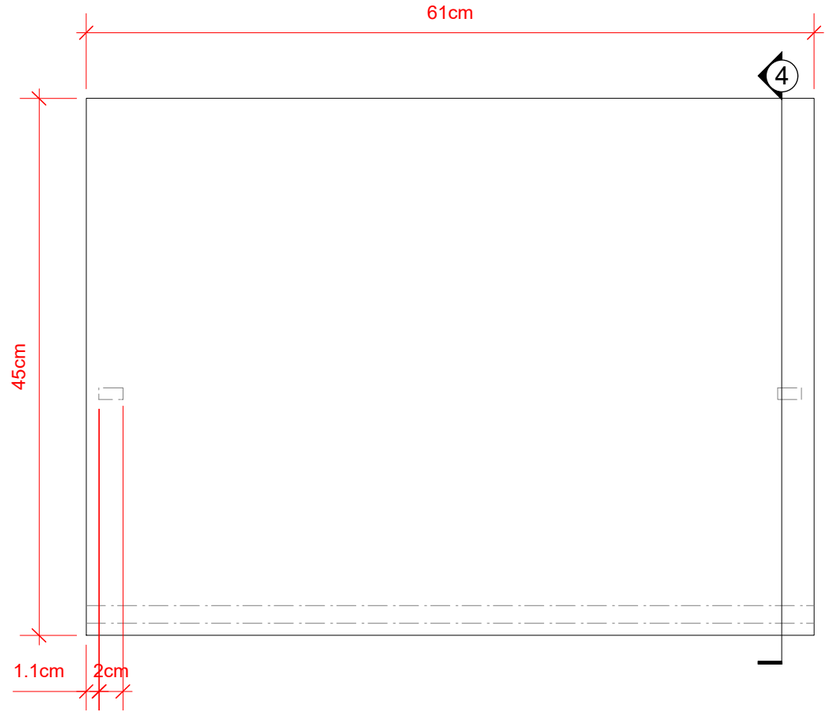

1 Vista Superior
Scale: 1:5

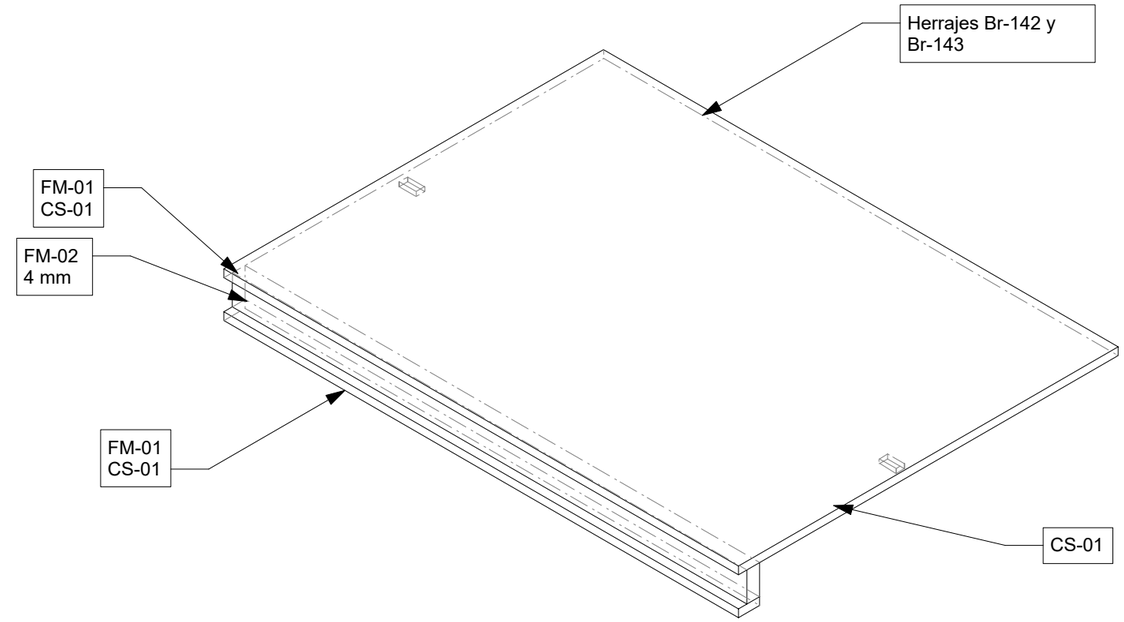

3 Isometrico
Scale: 1:5

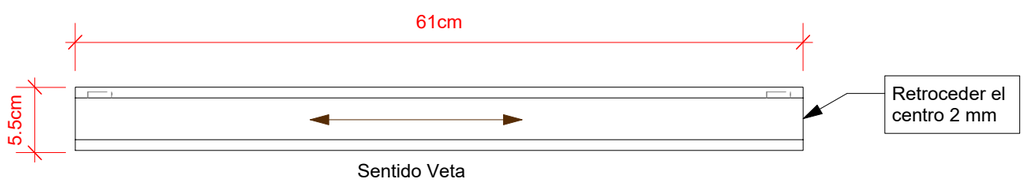

2 Vista Frontal
Scale: 1:5

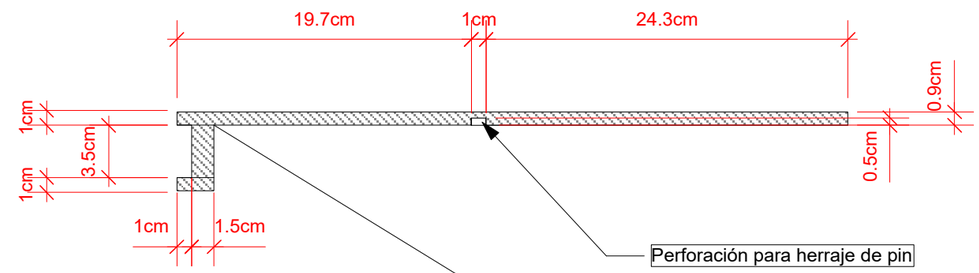

4 Corte
Scale: 1:4

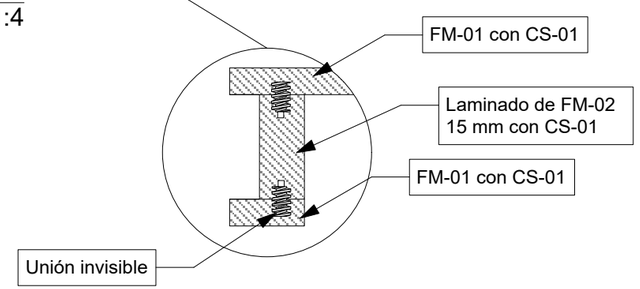

5 Detalle armado
Scale 1:2

Actualizado:1 de octubre de 2015

No.	Date	Issue Notes	Revision Notes	Date	No.	Zone	Appr

Date 06/05/15
Revision Revision
Project ID MADI
Drawing Code Drawing Code
CAD File Name Muebles_Brissa
Project Date 00/00/00

Designed By Bianca Castillo
Drawn By Bianca Castillo
Checked By MA
Reviewed By Marcelo Albertal
Submitted By BC
Project Manager Marcelo Albertal

Design Firm
MADI
Calle 88 #10-62 Bogota, DC, Colombia
3017867314
biancacastilloq@gmail.com

Consultant
Marcelo Albertal design International

Project Title
Mobiliario BRISSA 2015

Sheet Title
BR-160 Entrepaño S6045

Scale
Ver escala de cada dibujo

Sheet No.
43
of
83

NOTA: Entrepaño exclusivo del Armario BR-155

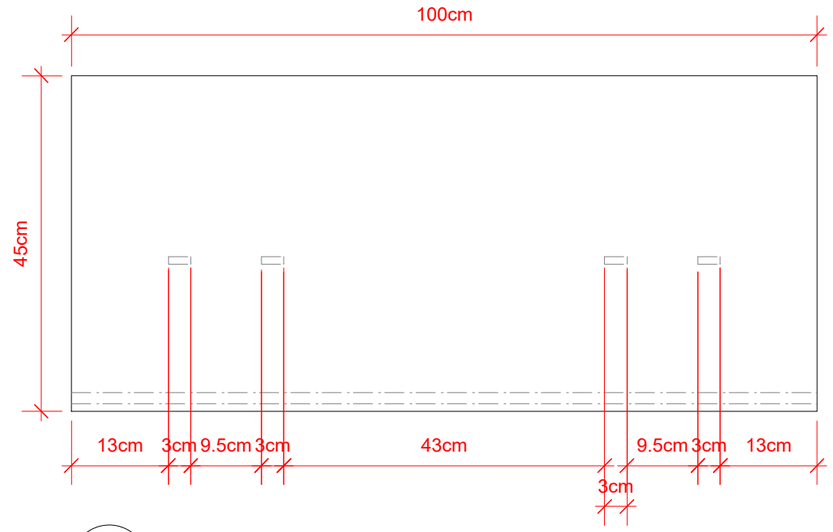

1 Vista Superior
Scale: 1:8

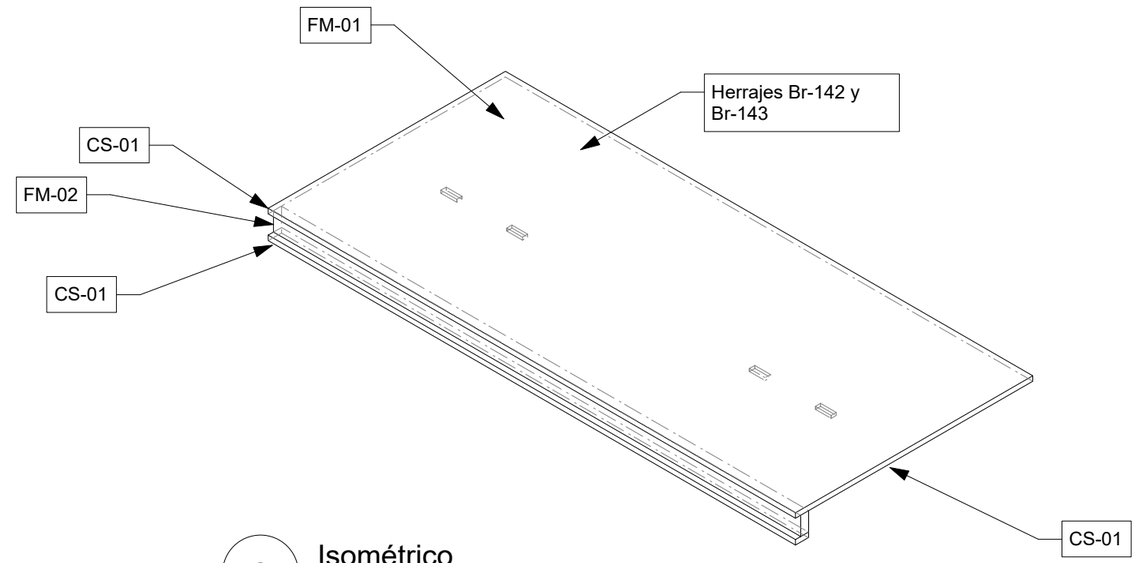

3 Isométrico
Scale: 1:8

2 Vista Frontal
Scale: 1:8

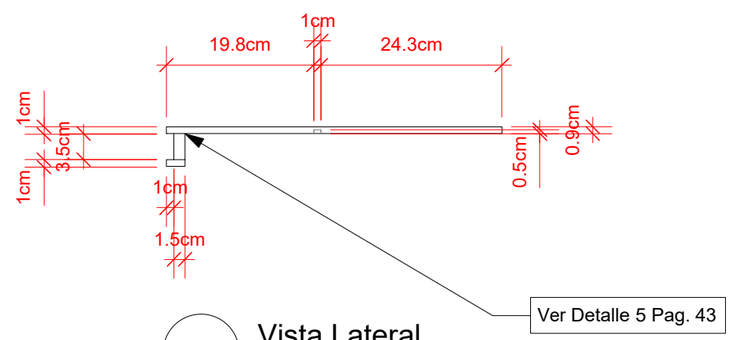

4 Vista Lateral
Scale: 1:8

Actualizado:1 de octubre de 2015

No.	Date	Issue Notes	No.	Date	Revision Notes	Zone	Appr

Date 06/05/15
Revision Revisión
Project ID MADI
Drawing Code Drawing Code
CAD File Name Muebles_Brissa
Revision 00/00/00

Designed By Blanca Castillo
Drawn By Blanca Castillo
Checked By MA
Reviewed By Marcelo Albertal
Submitted By BC
Project Manager Marcelo Albertal

Design Firm
MADI
Calle 88 #10-62 Bogota, DC, Colombia
3017867314
biancacastilloq@gmail.com

Consultant
Marcelo Albertal design international

Project Title
Mobiliario BRISSA 2015

Sheet Title
BR-161 Entrepaño S10045

Scale
Ver escala de cada dibujo

Sheet No.
44
of
83

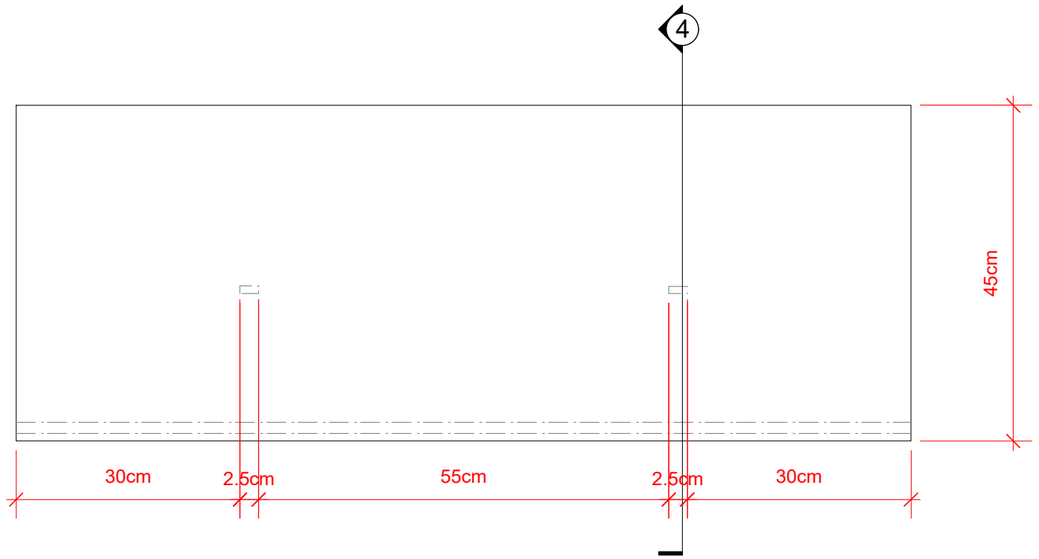

1 Vista Superior
Scale: 1:8

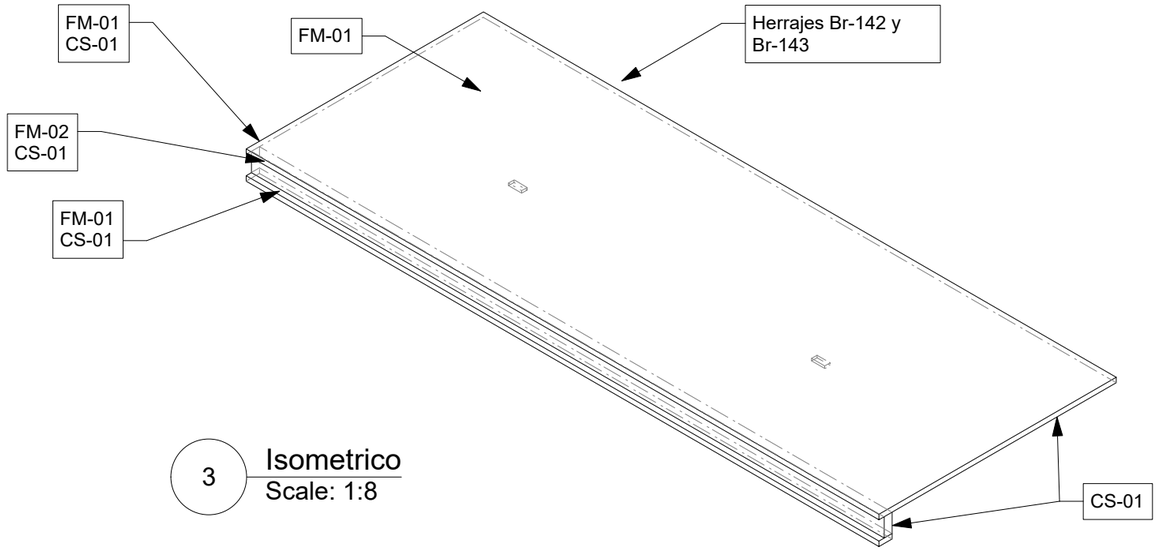

3 Isometrico
Scale: 1:8

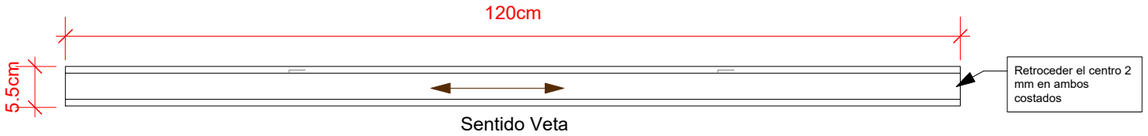

2 Vista Frontal
Scale: 1:8

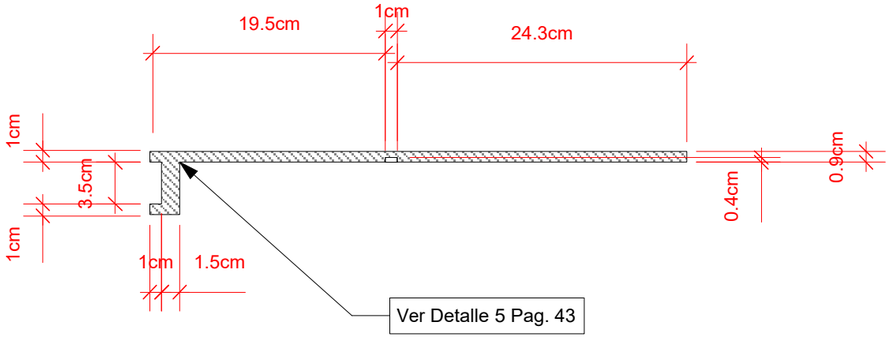

4 Corte
Scale: 1:5

Actualizado:1 de octubre de 2015

No.	Date	Issue Notes	No.	Date	Revision Notes	Zone	Appr

Designed By: Blanca Castillo
Date: 06/05/15
Drawn By: Blanca Castillo
Revision: Revision
Checked By: MA
Project ID: MADI
Reviewed By: Marcelo Albertal
Drawing Code: Drawing Code
Submitted By: BC
CAD File Name: Muebles_Brissa
Project Manager: Marcelo Albertal
Revision: 00/00/00

Design Firm: MADI
Calle 88 #10-62 Bogota, DC, Colombia
3017867314
biancacastillog@gmail.com

Consultant: Marcelo Albertal design International

Project Title: Mobiliario BRISSA 2015

Sheet Title: BR-162 Entrepaño S12045

Scale: Ver escala de cada dibujo

Sheet No. 45 of 83

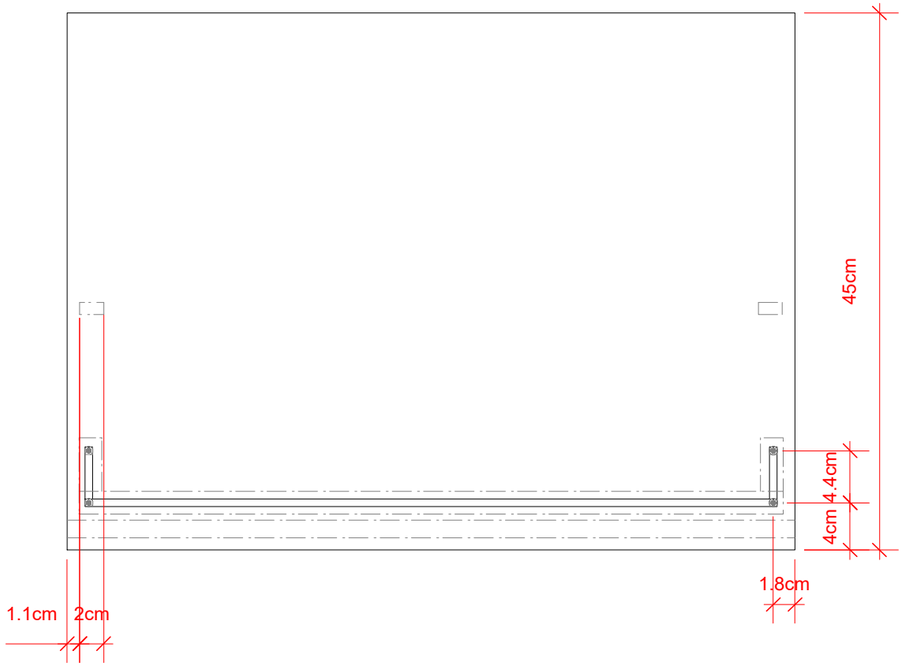

1 Vista Superior
Scale: 1:5

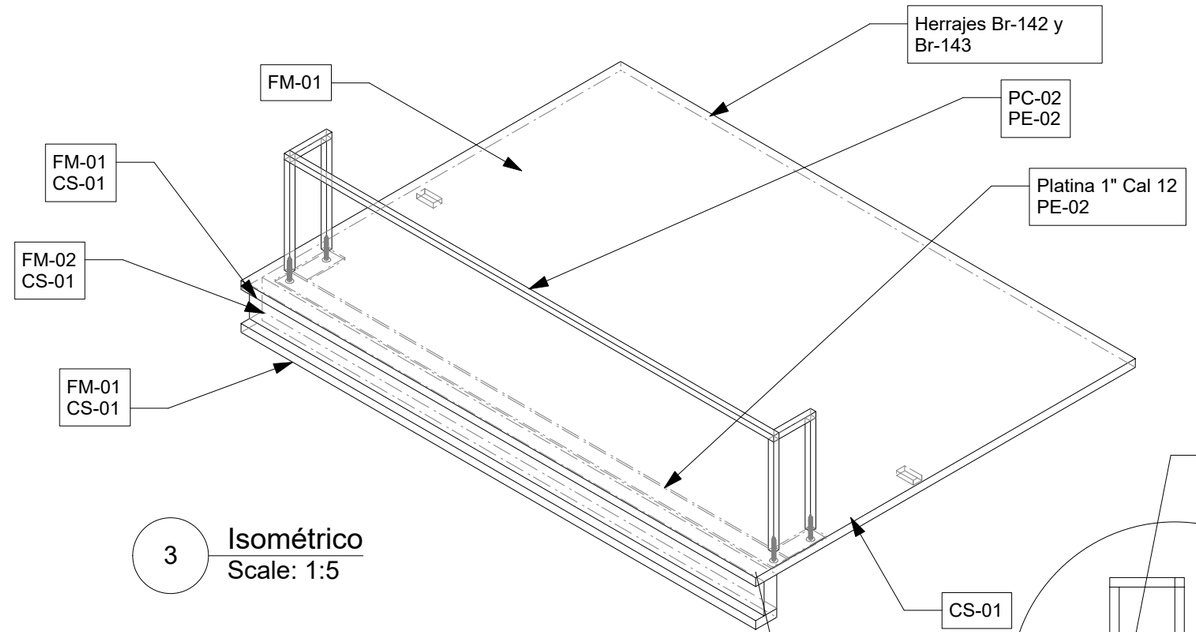

3 Isométrico
Scale: 1:5

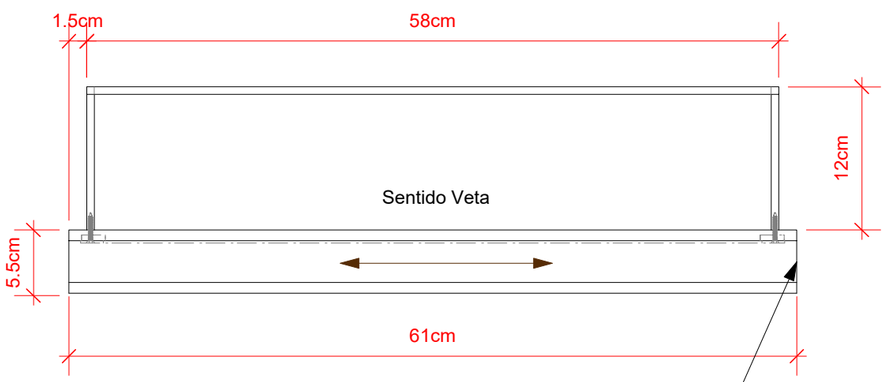

2 Vista Frontal
Scale: 1:5

Retroceder el centro 2 mm en ambos costados

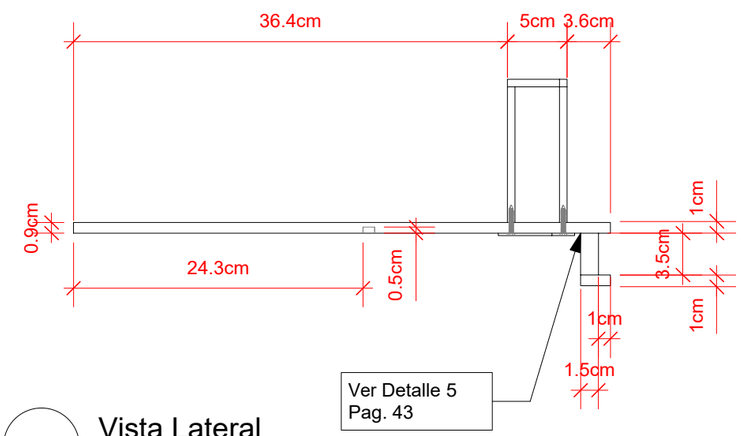

Ver Detalle 5 Pag. 43

4 Vista Lateral
Scale: 1:5

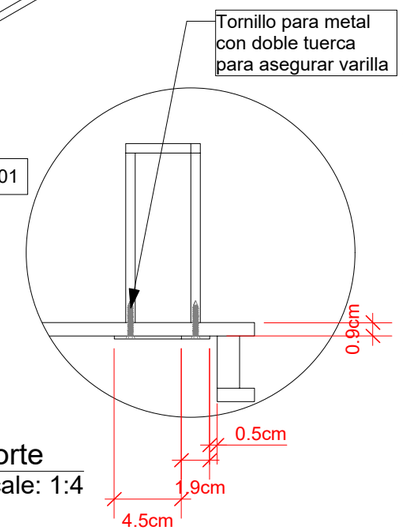

5 Corte
Scale: 1:4

Tornillo para metal con doble tuerca para asegurar varilla

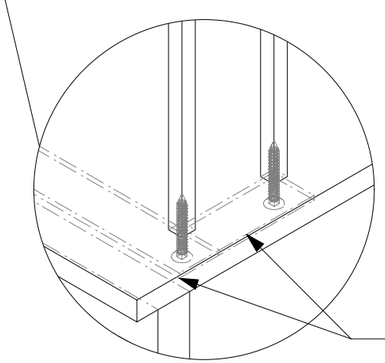

Platina Cal 12 refuerzo

6 Detalle
Scale 1:2

Actualizado:1 de octubre de 2015

No.	Date	Issue Notes	No.	Date	Revision Notes	Zone	Appr

Date 06/05/15
Revision Revisión
Project ID MADI
Drawing Code Drawing Code
CAD File Name Muebles_Brissa
Project Date 00/00/00

Designed By Bianca Castillo
Drawn By Bianca Castillo
Checked By MA
Reviewed By Marcelo Albertal
Submitted By BC
Project Manager Marcelo Albertal

Design Firm
MADI
Calle 88 #10-62 Bogota, DC, Colombia
3017867314
biancacastilloj@gmail.com

Consultant
Marcelo Albertal design International

Project Title
Mobiliario BRISSA 2015

Sheet Title
BR-163 Entrepaño T6045

Scale
Ver escala de cada dibujo

Sheet No.
46
of
83

NOTA: Entrepaño exclusivo del Armario BR-155

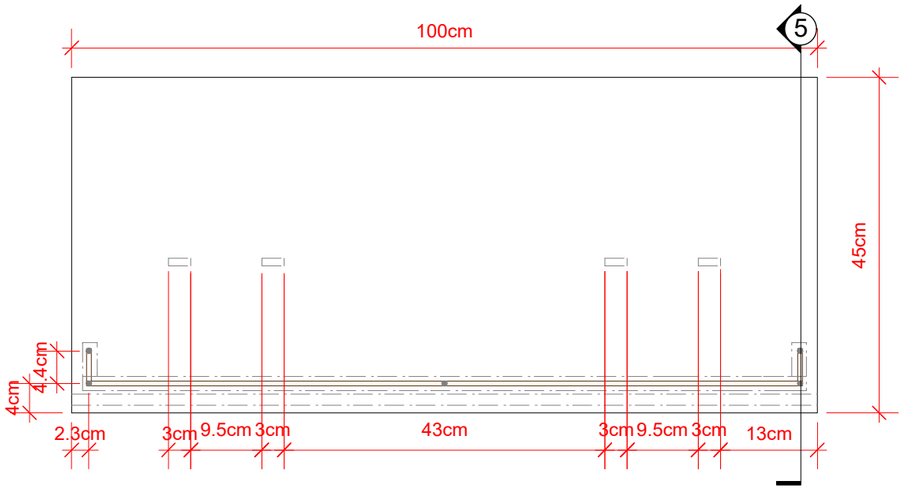

1 Vista Superior
Scale: 1:8

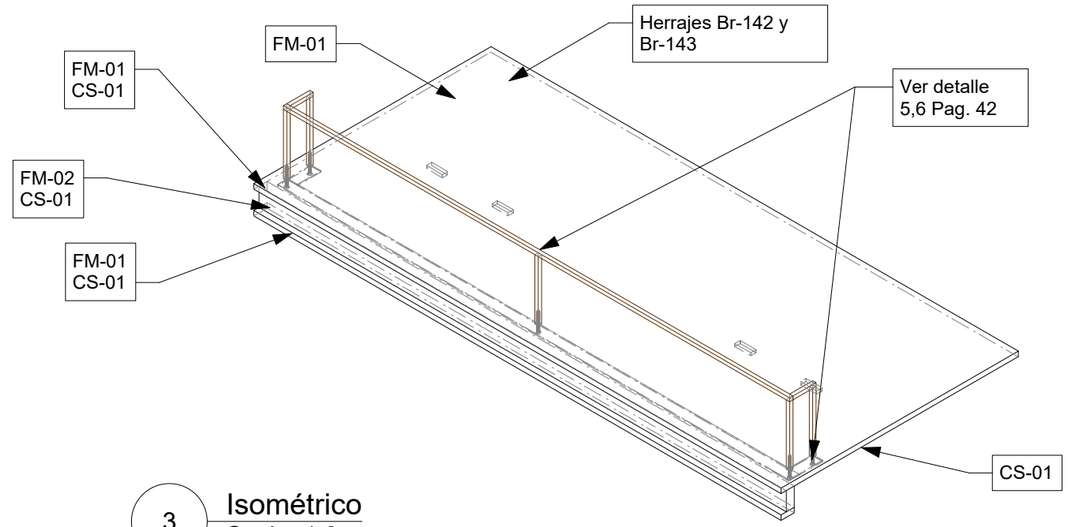

3 Isométrico
Scale: 1:8

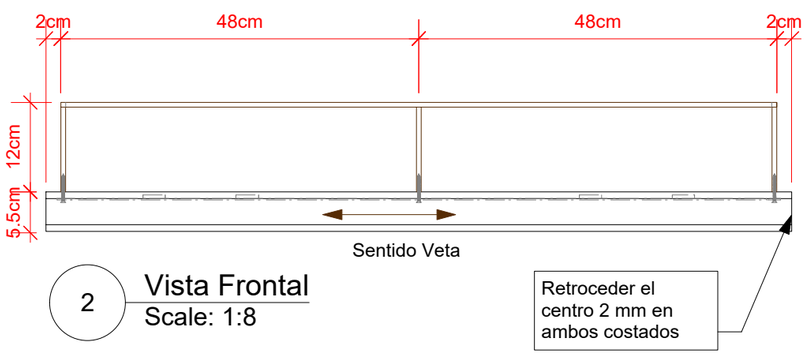

2 Vista Frontal
Scale: 1:8

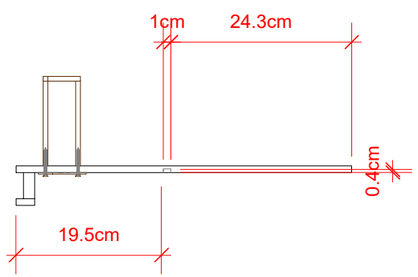

4 Vista Lateral
Scale: 1:8

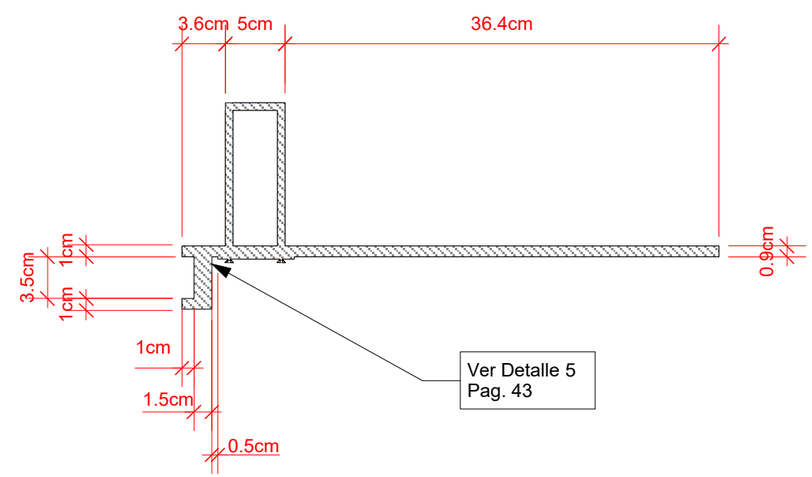

5 Corte
Scale: 1:5

Actualizado:1 de octubre de 2015

No.	Date	Issue Notes	No.	Date	Revision Notes	Zone	Appr

Designed By: Blanca Castillo
Drawn By: Blanca Castillo
Checked By: MA
Reviewed By: Marcelo Albertal
Submitted By: BC
Project Manager: Marcelo Albertal

Date: 06/05/15
Revision: Revisión
Project ID: MADI
Drawing Code: Drawing Code
CAD File Name: Muebles_Brissa
Plot Date: 00/00/00

Design Firm: MADI
Calle 88 #10-62 Bogota, DC, Colombia
3017867314
biancacastilloq@gmail.com

Consultant: Marcelo Albertal design International

Project Title: Mobiliario BRISSA 2015

Sheet Title: BR-164 Entrepaño T10045

Scale: Ver escala de cada dibujo

Sheet No. 47 of 83

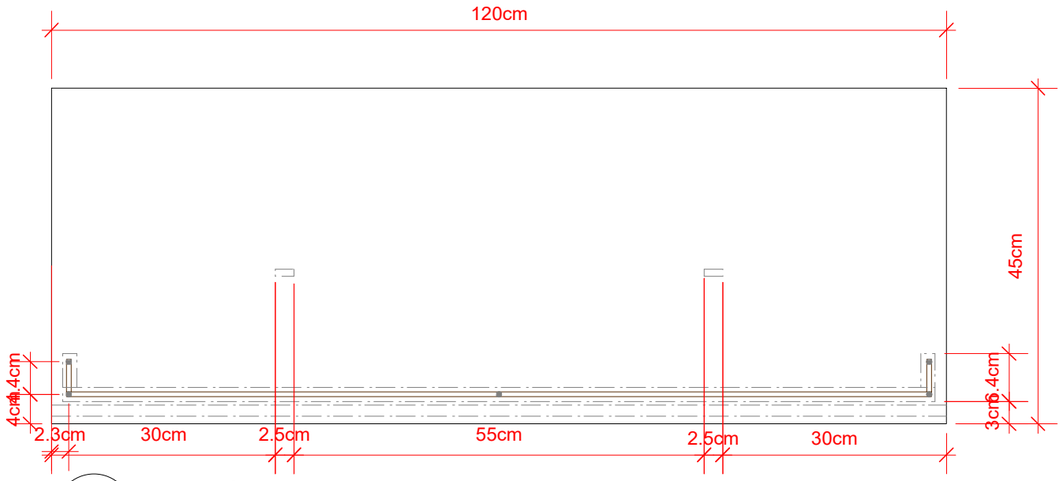

1 Vista Superior
Scale: 1:8

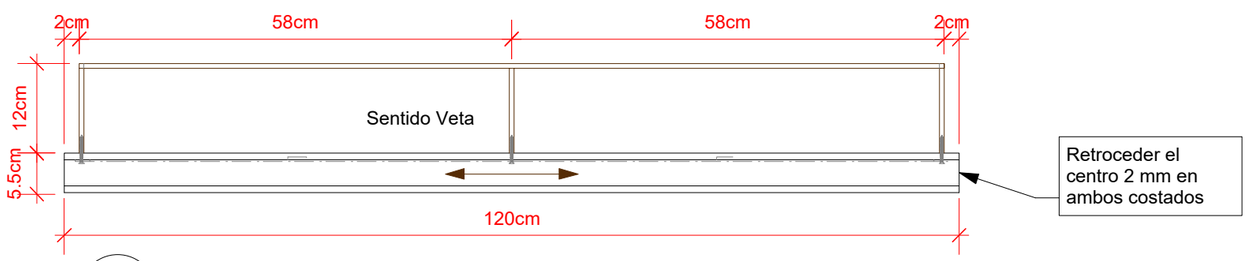

2 Vista Frontal
Scale: 1:8

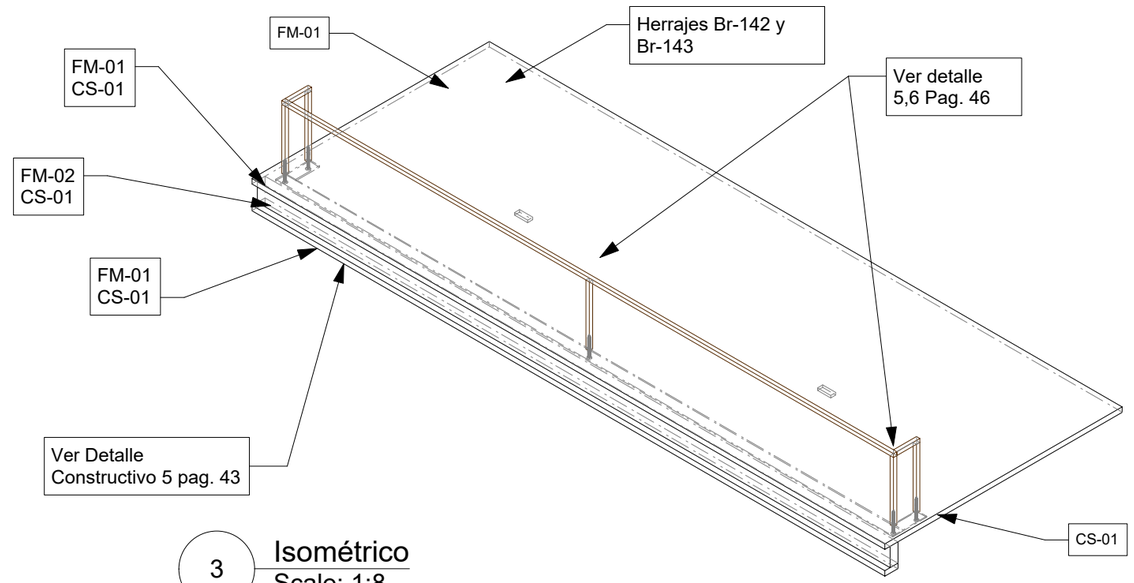

3 Isométrico
Scale: 1:8

Actualizado:1 de octubre de 2015

No.	Date	Issue Notes	Revision Notes	Zone	Appr

No.	Date	Revision

Date 06/05/15
Revision Revision
Project ID MADI
Drawing Code Drawing Code
CAD File Name Muebles_Brissa
Project Date 00/00/00

Designed By Blanca Castillo
Drawn By Blanca Castillo
Checked By MA
Reviewed By Marcelo Albertal
Submitted By BC
Project Manager Marcelo Albertal

Design Firm
MADI
Calle 88 #10-62 Bogota, DC, Colombia
3017867314
biancacastillog@gmail.com

Consultant
Marcelo Albertal design international

Project Title
Mobiliario BRISSA 2015

Sheet Title
BR-165 Entrepaño T12045

Scale
Ver escala de cada dibujo

Sheet No.
48
of
83

NOTA: Entrepaño exclusivo del Armario BR-156

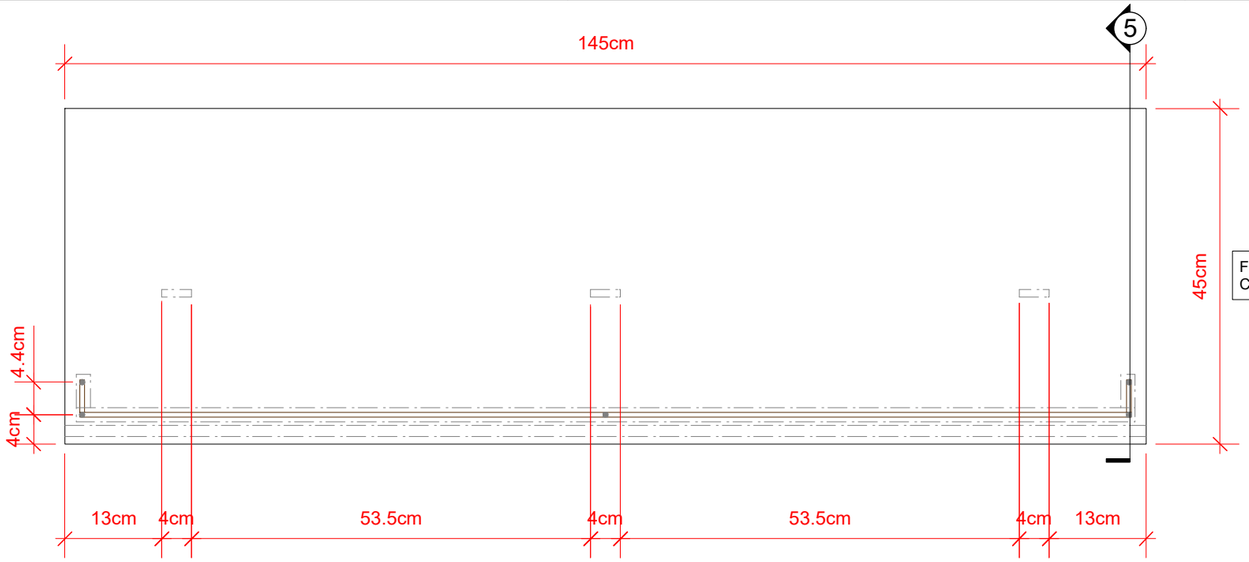

1 Vista Superior
Scale: 1:8

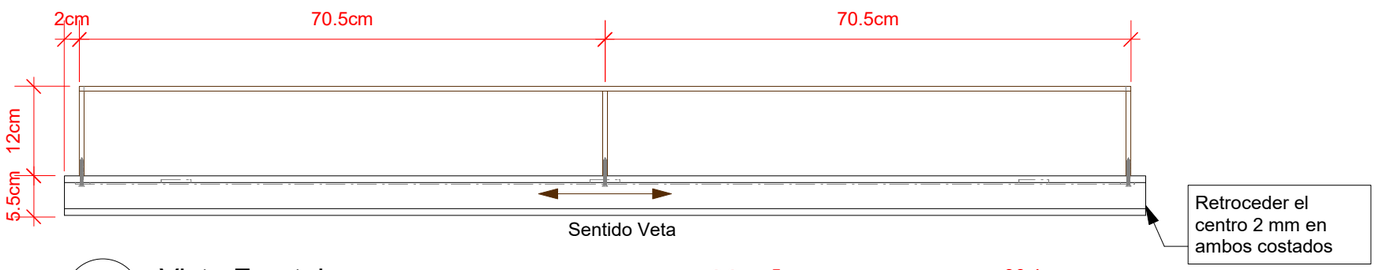

2 Vista Frontal
Scale: 1:8

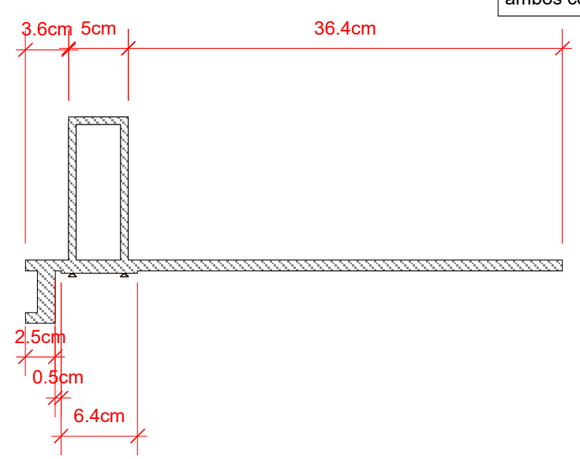

5 Corte
Scale: 1:5

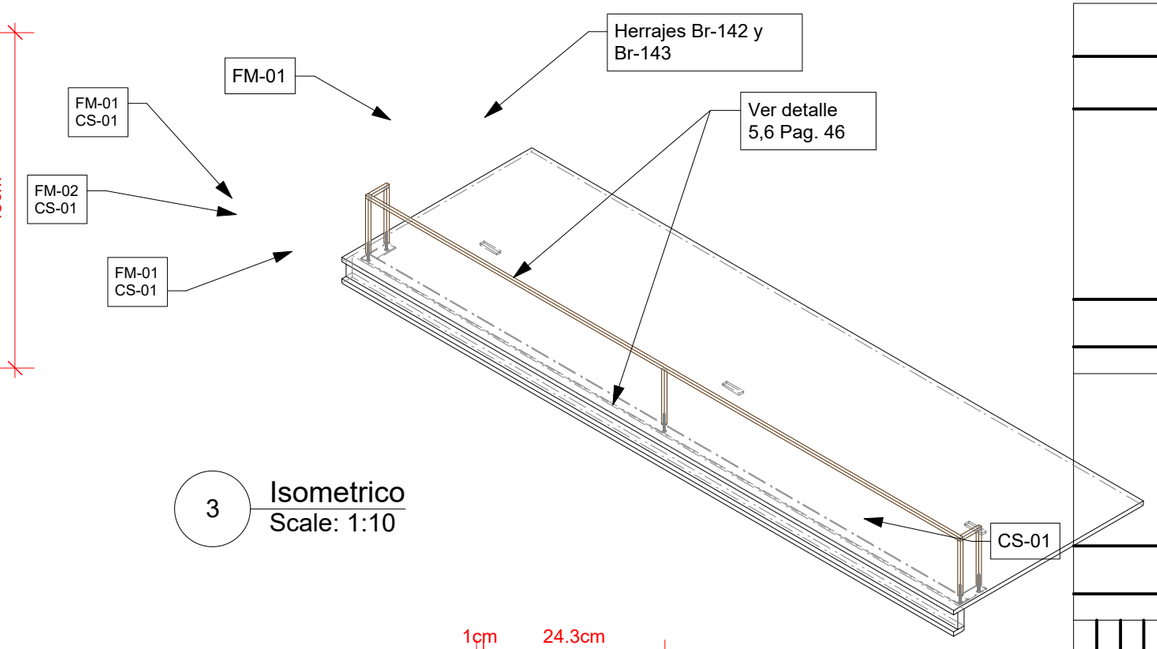

3 Isometrico
Scale: 1:10

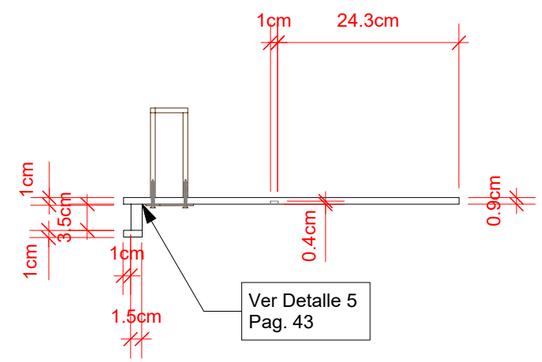

4 Vista Lateral
Scale: 1:8

Actualizado:1 de octubre de 2015

Date	06/05/15
Revision	Revision
Project ID	MADI
Drawing Code	Drawing Code
CAD File Name	Muebles_Brissa
PAS Code	00/00/00
Designed By	Bianca Castillo
Drawn By	Bianca Castillo
Checked By	MA
Reviewed By	Marcelo Albertal
Submitted By	BC
Project Manager	Marcelo Albertal

Appr | Zone | Revision Notes | Date | No. | Issue Notes | Date | No.

Design Firm
MADI
Calle 88 #10-62 Bogota, DC, Colombia
3017867314
biancacastillog@gmail.com

Consultant
Marcelo Albertal design International

Project Title
Mobiliario BRISSA 2015

Sheet Title
BR-166 Entrepaño T14545

Scale
Ver escala de cada dibujo

Sheet No.

NOTA: Entrepaño exclusivo para exhibición de almohadas

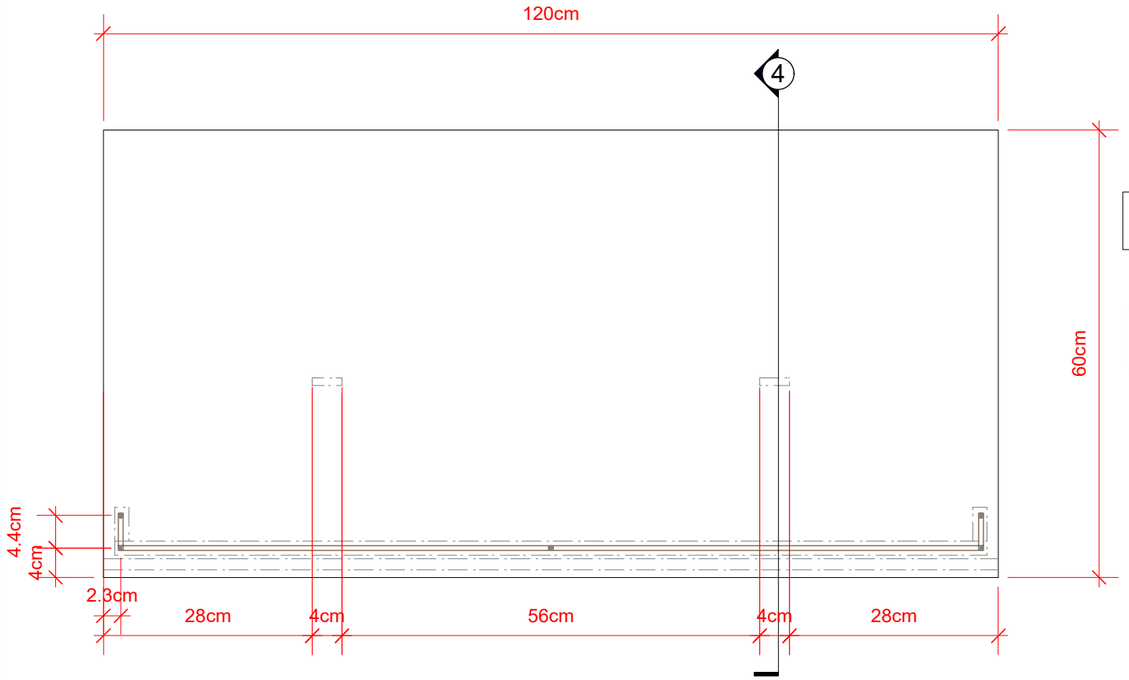

1 Vista Superior
Scale: 1:8

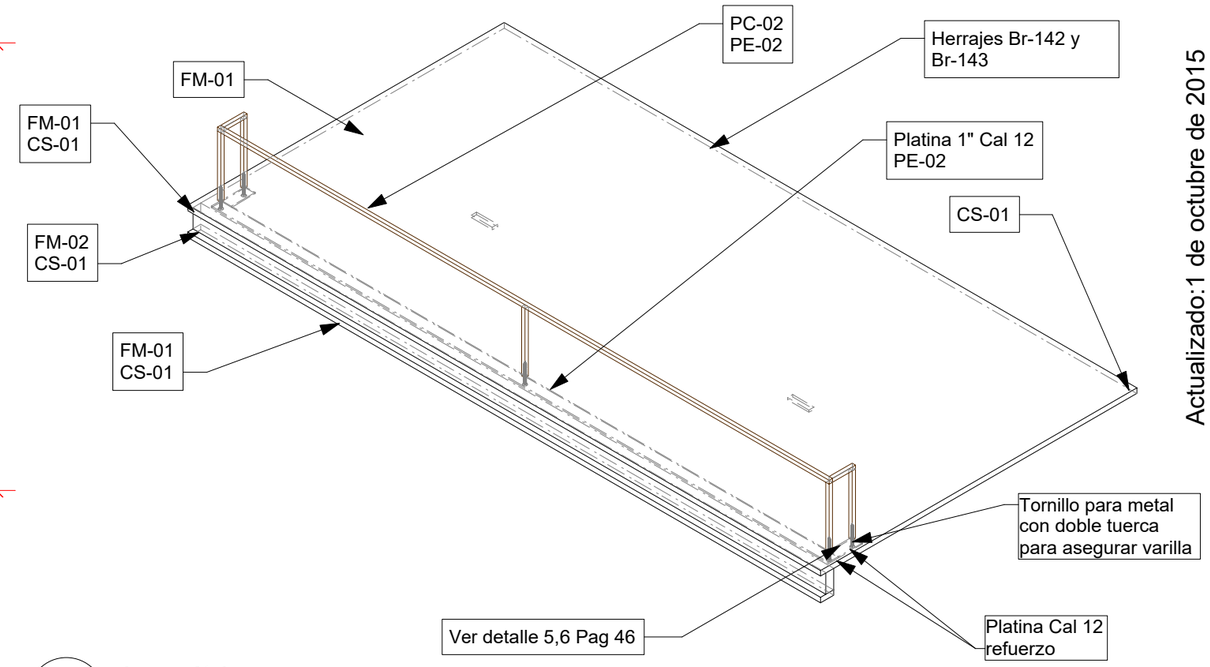

3 Isométrico
Scale: 1:8

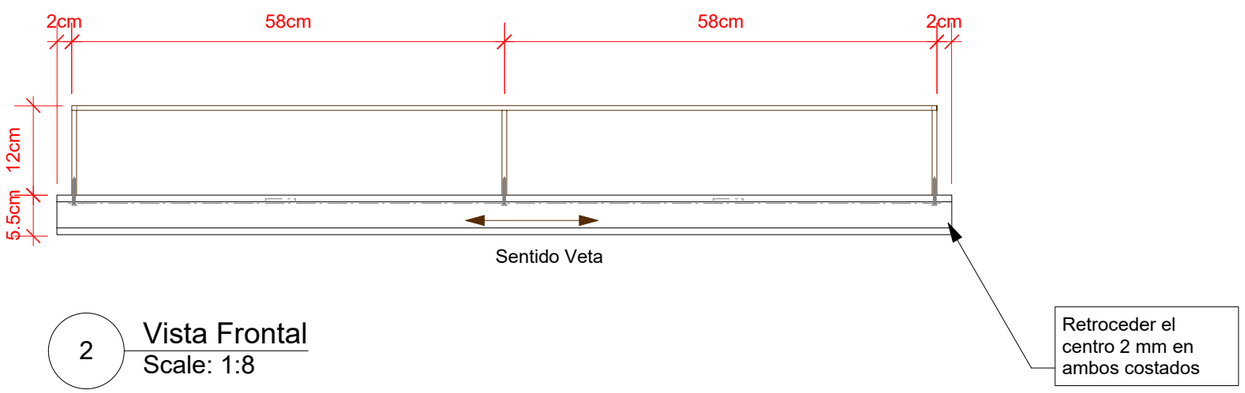

2 Vista Frontal
Scale: 1:8

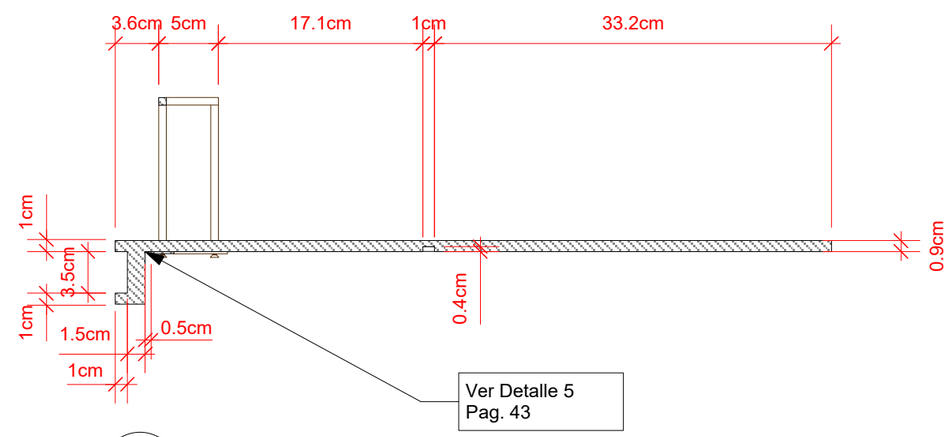

4 Corte
Scale: 1:5

Actualizado:1 de octubre de 2015

No.	Date	Issue Notes	No.	Date	Revision Notes	Zone	Appr

Date 06/05/15
Revision Revisión
Project ID MADI
Drawing Code Drawing Code
CAD File Name Muebles_Brissa
Project Date 00/00/00

Designed By Bianca Castillo
Drawn By Bianca Castillo
Checked By MA
Reviewed By Marcelo Albertal
Submitted By BC
Project Manager Marcelo Albertal

Design Firm
MADI
Calle 88 #10-62 Bogota, DC, Colombia
3017867314
biancacastillog@gmail.com

Consultant
Marcelo Albertal design International

Project Title
Mobiliario BRISSA
2015

Sheet Title
BR-167 Entrepaño T12060

Scale
Ver escala de cada dibujo

Sheet No.
50
of
83

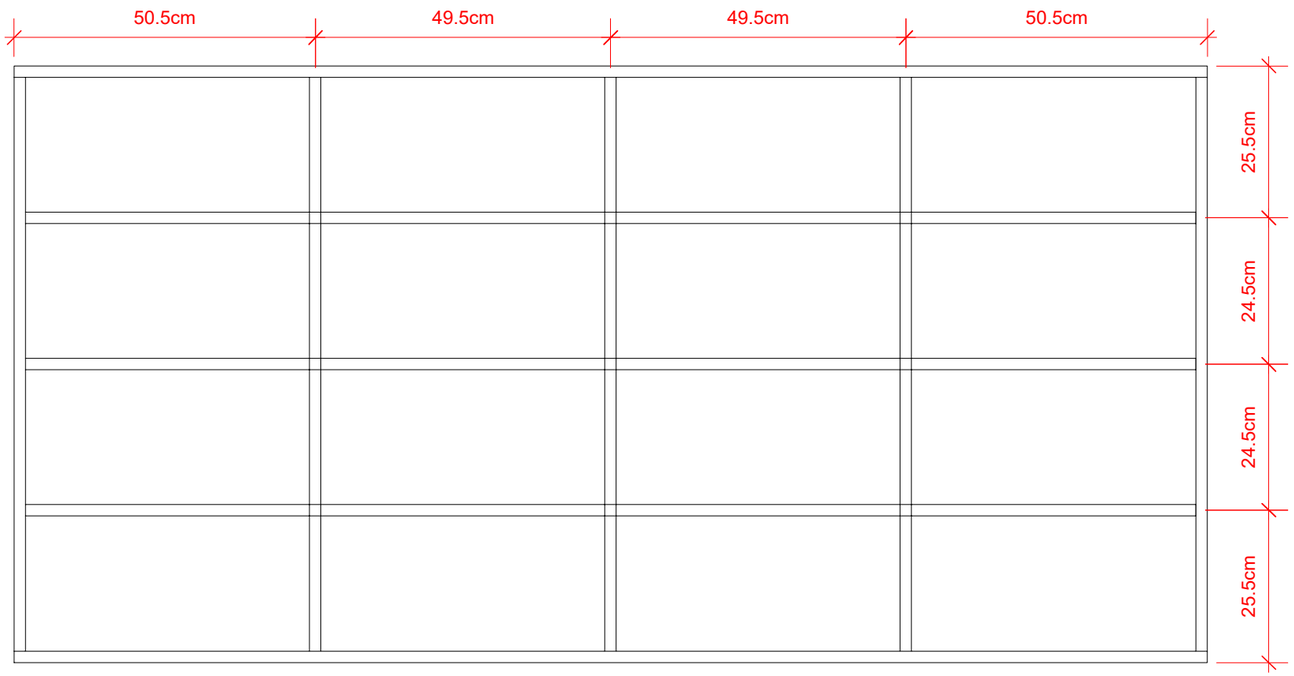

1 Vista Superior
Scale: 1:10

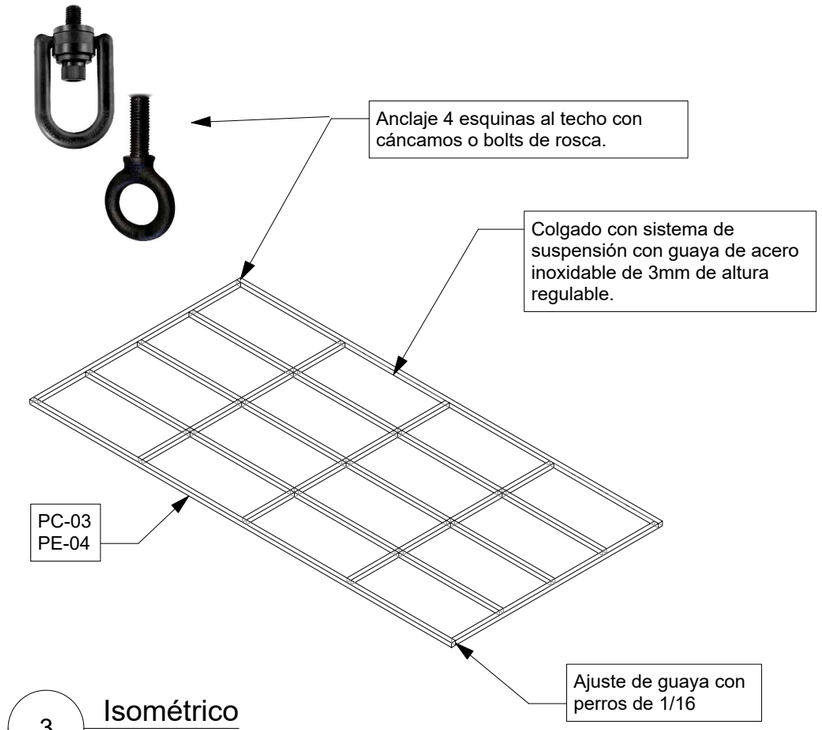

3 Isométrico
Scale: 1:20

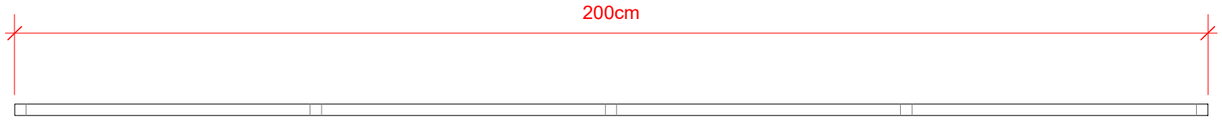

2 Vista Frontal
Scale: 1:10

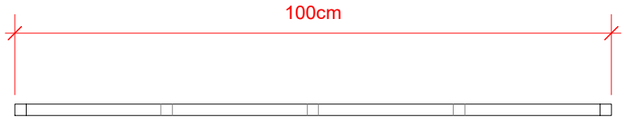

4 Vista Frontal
Scale: 1:10

Actualizado:1 de octubre de 2015

No.	Date	Issue Notes	No.	Date	Revision Notes	Zone	Appr

Date 06/05/15
Revision Revision
Project ID MADI
Drawing Code Drawing Code
CAD File Name Muebles_Brissa
Plot Date 00/00/00

Designed By Blanca Castillo
Drawn By Blanca Castillo
Checked By MA
Reviewed By Marcelo Albertal
Submitted By BC
Project Manager Marcelo Albertal

Design Firm
MADI
Calle 88 #10-62 Bogota, DC, Colombia
3017867314
biancacastillog@gmail.com

Consultant
Marcelo Albertal design international

Project Title
Mobiliario BRISSA
2015

Sheet Title
BR-200 Rejilla de Vitrina

Scale
Ver escala de cada dibujo

Sheet No.
57
of
83

NOTA: Bases para exhibición en mesas

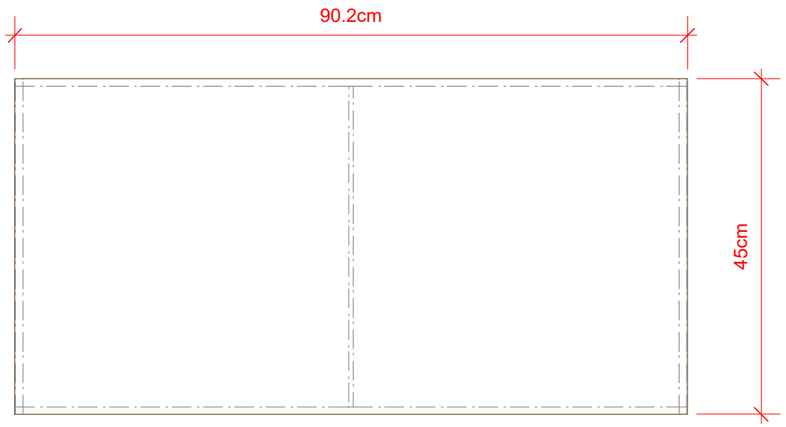

1 Vista Superior
Scale: 1:8

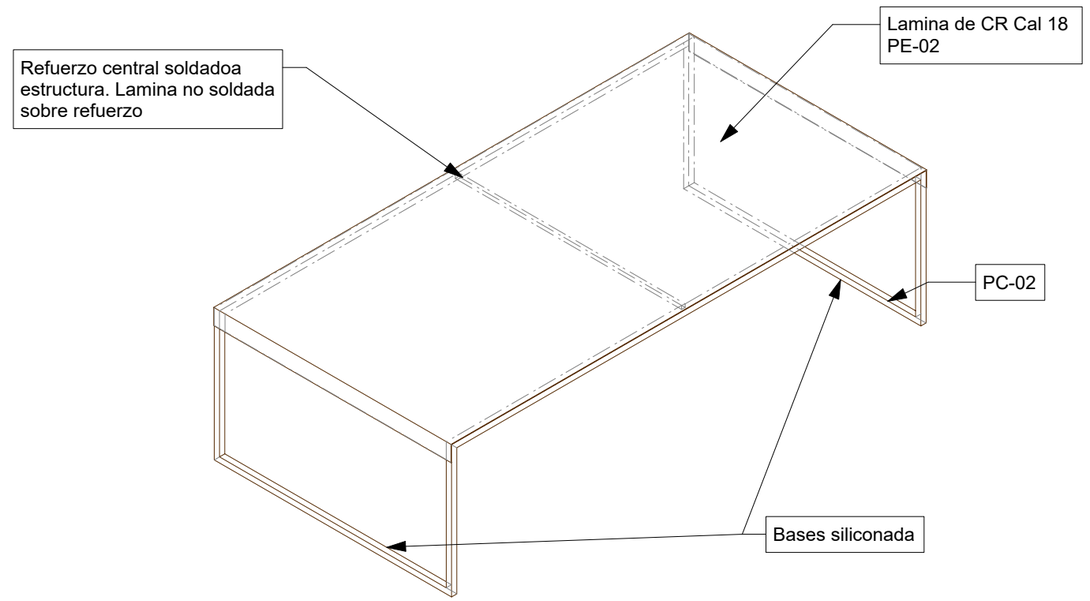

3 Isométrico
Scale: 1:8

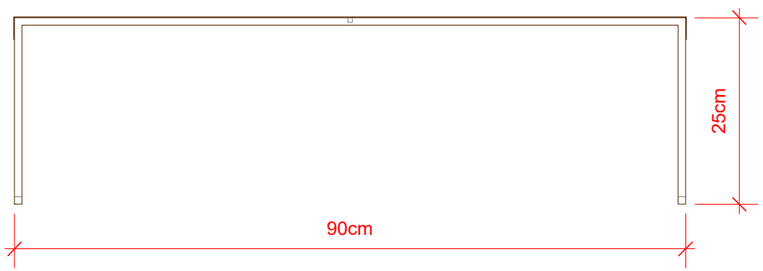

2 Vista Frontal
Scale: 1:8

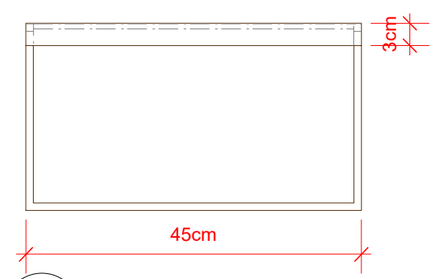

4 Vista Lateral
Scale: 1:8

Actualizado:1 de octubre de 2015

No.	Date	Issue Notes	No.	Date	Revision Notes	Zone	Appr

Date 06/05/15
Revision Revision
Project ID MADI
Drawing Code Drawing Code
CAD File Name Muebles_Brissa
Project Date 00/00/00

Designed By Bianca Castillo
Drawn By Bianca Castillo
Checked By MA
Reviewed By Marcelo Albertal
Submitted By BC
Project Manager Marcelo Albertal

Design Firm
MADI
Calle 88 #10-62 Bogota, DC, Colombia
3017867314
biancacastillog@gmail.com

Consultant
Marcelo Albertal design International

Project Title
Mobiliario BRISSA
2015

Sheet Title
BR-201 Niveles de Mesas 1

Scale
Ver escala de cada dibujo

Sheet No.
58
of
83

NOTA: Bases para exhibición en mesas

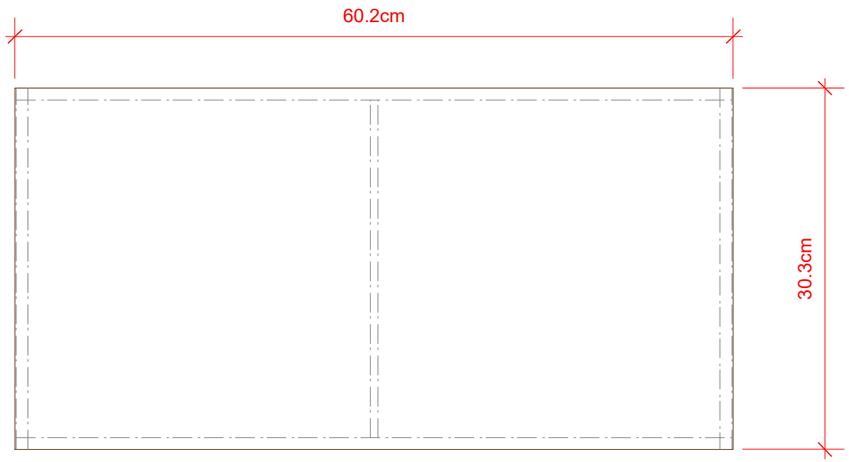

1 Vista Superior
Scale: 1:5

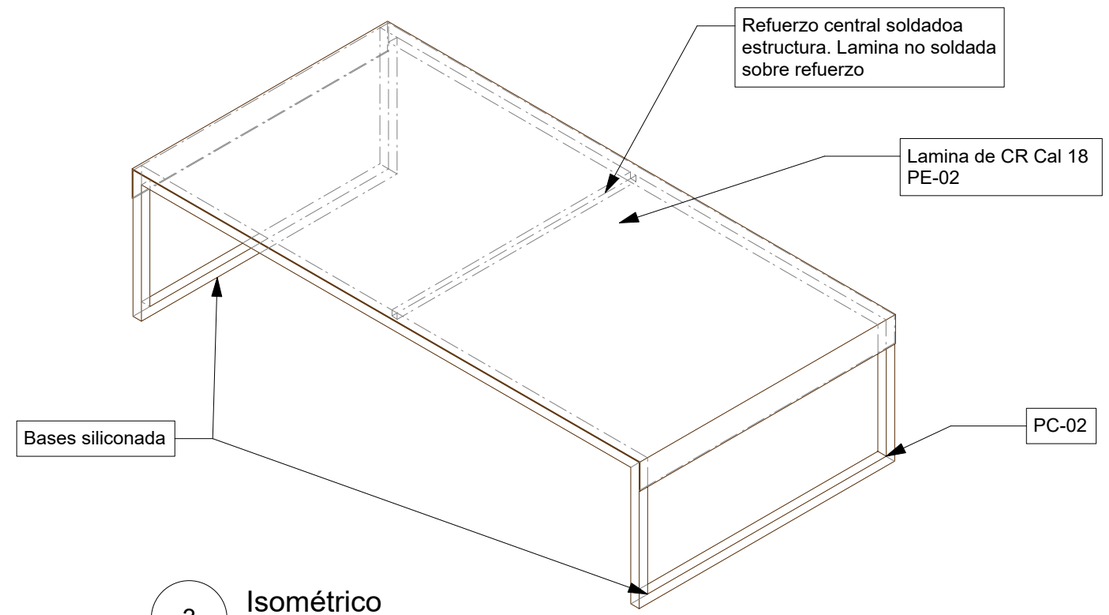

3 Isométrico
Scale: 1:5

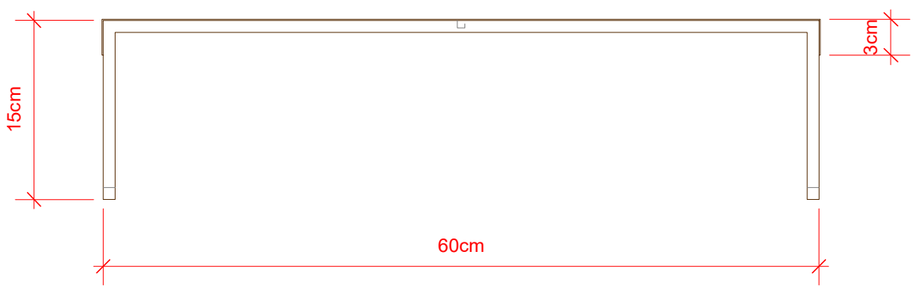

2 Vista Frontal
Scale: 1:5

Actualizado:1 de octubre de 2015

No.	Date	Issue Notes	No.	Date	Revision Notes	Zone	Appr

Date	06/05/15
Revision	Revisión
Project ID	MADI
Drawing Code	Drawing Code
CAD File Name	Muebles_Brissa
Plot Date	00/00/00
Designed By	Blanca Castillo
Drawn By	Blanca Castillo
Checked By	MA
Reviewed By	Marcelo Albertal
Submitted By	BC
Project Manager	Marcelo Albertal

Design Firm
MADI
Calle 88 #10-62 Bogota, DC, Colombia
3017867314
biancacastilloq@gmail.com

Consultant
Marcelo Albertal design International

Project Title
Mobiliario BRISSA
2015

Sheet Title
BR-202 Niveles de Mesas 2

Scale
Ver escala de cada dibujo

Sheet No.
59
of
83

NOTA: Entrepaño exclusivo para exhibición de almohadas

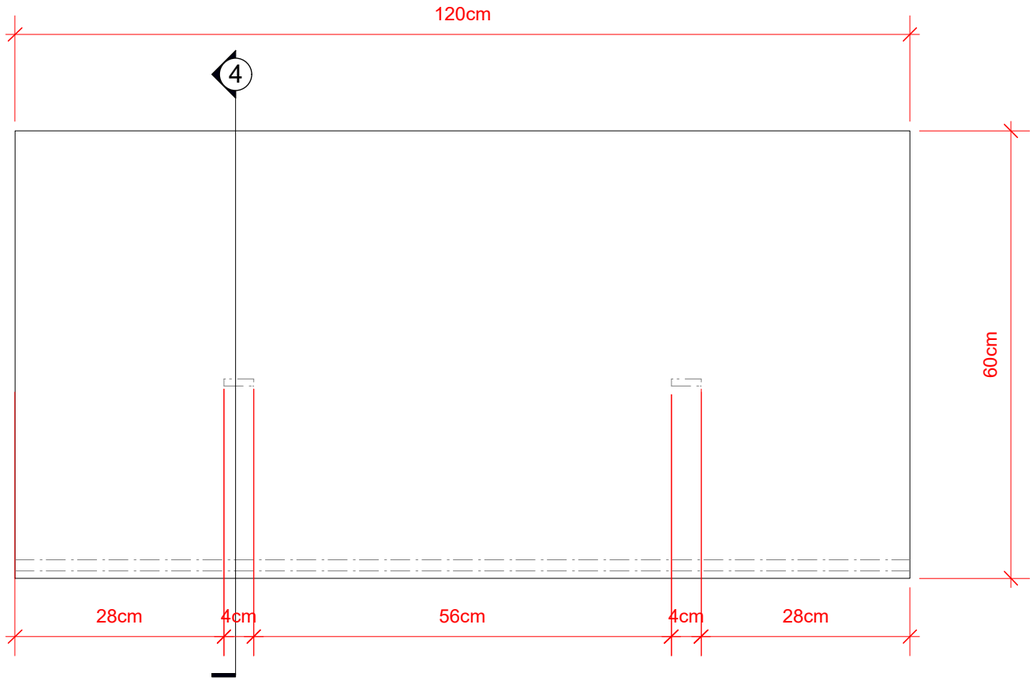

1 Vista Superior
Scale: 1:8

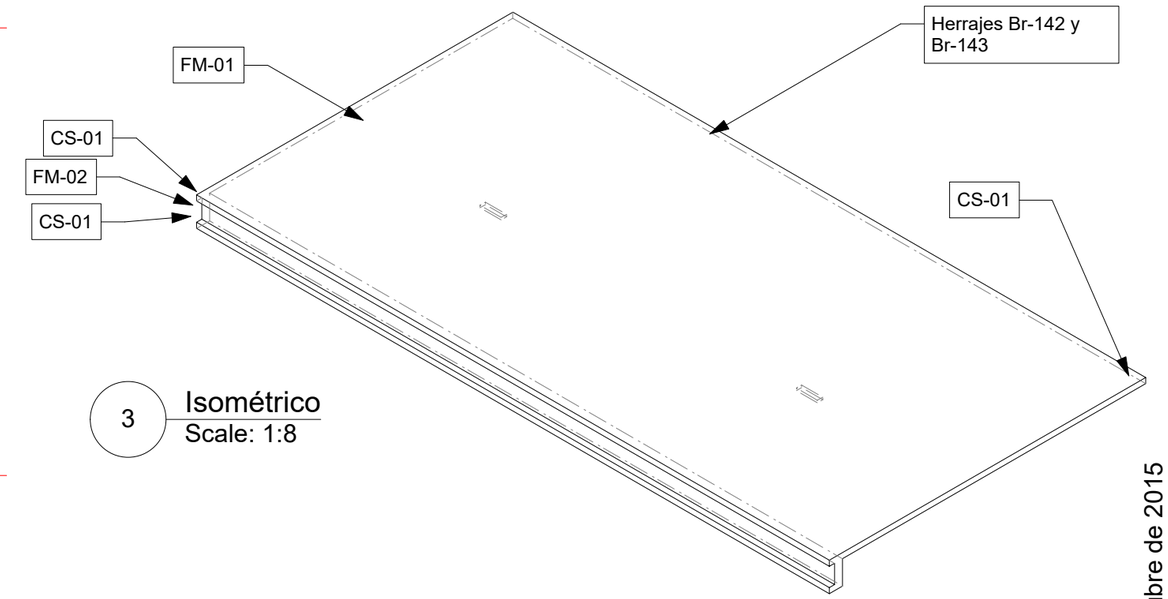

3 Isométrico
Scale: 1:8

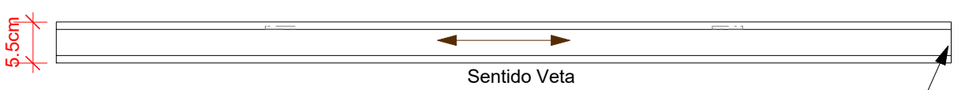

2 Vista Frontal
Scale: 1:8

Retroceder el centro 2 mm en ambos costados

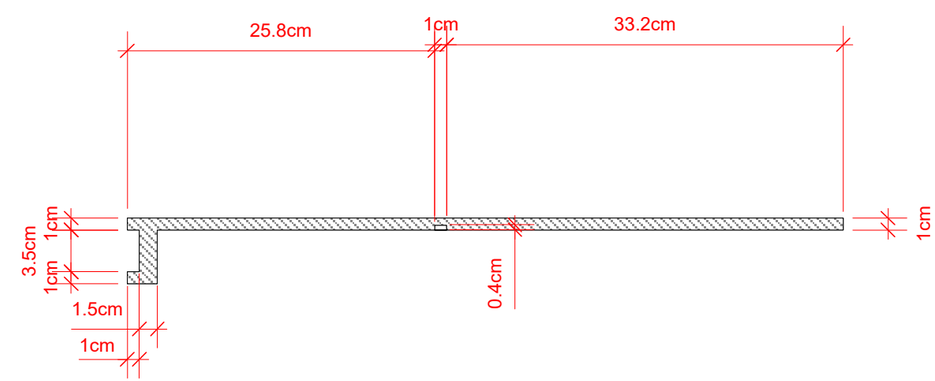

4 Corte
Scale: 1:5

Actualizado:1 de octubre de 2015

Designed By	Bianca Castillo	Date	06/05/15
Drawn By	Bianca Castillo	Revision	Revisión
Checked By	MA	Project ID	MADI
Reviewed By	Marcelo Albertal	Drawing Code	Drawing Code
Submitted By	BC	CAD File Name	Muebles_Brissa
Project Manager	Marcelo Albertal	Project Title	00/00/00

No.	Date	Issue Notes	No.	Date	Revision Notes	Zone	Appr

Design Firm
MADI
Calle 88 #10-62 Bogota, DC, Colombia
3017867314
biancacastillog@gmail.com

Consultant
Marcelo Albertal design international

Project Title
Mobiliario BRISSA 2015

Sheet Title
BR-168 Entrepaño S12060

Scale
Ver escala de cada dibujo

Sheet No.
60
of
83

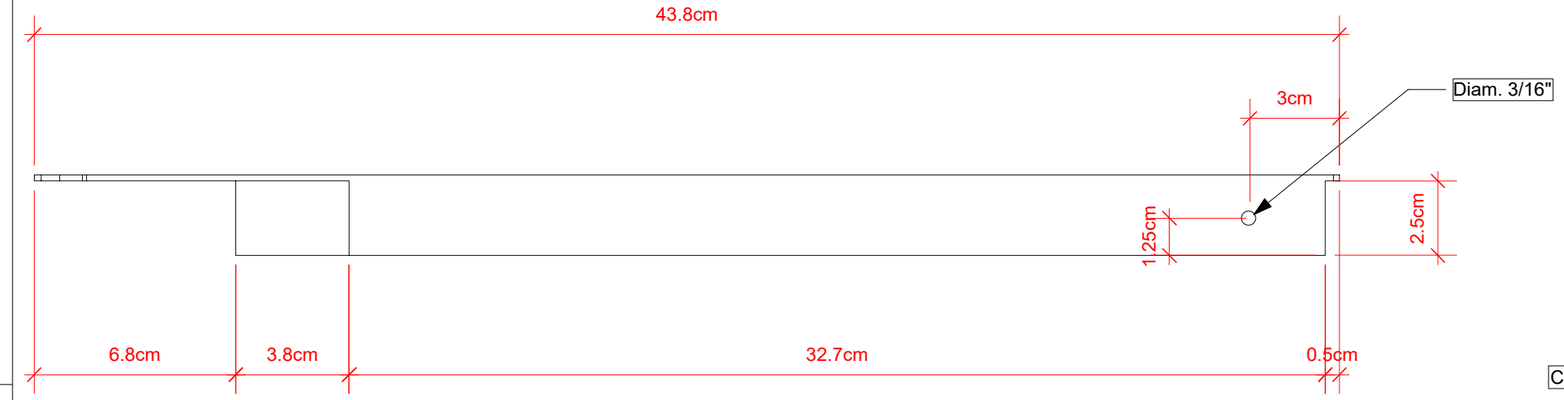

1 Vista Superior
Scale 1:2

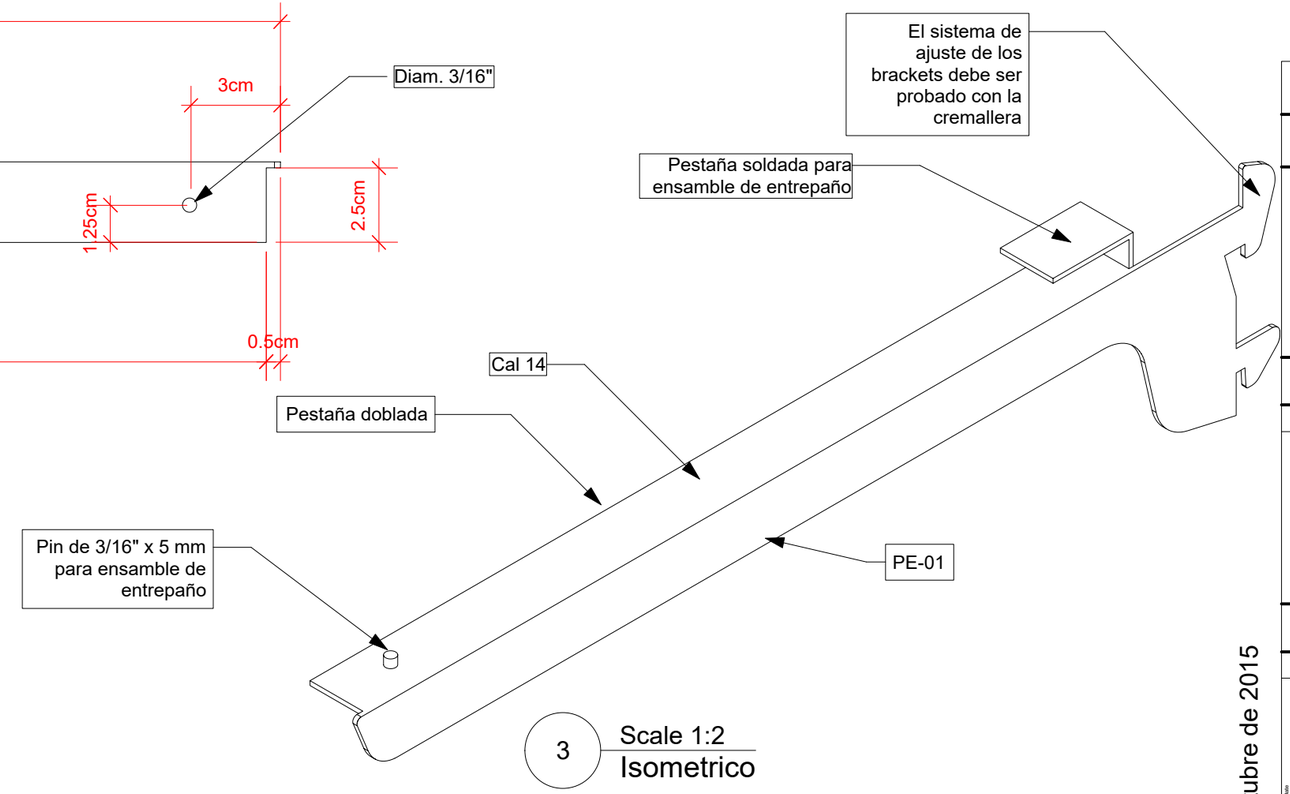

3 Scale 1:2
Isometrico

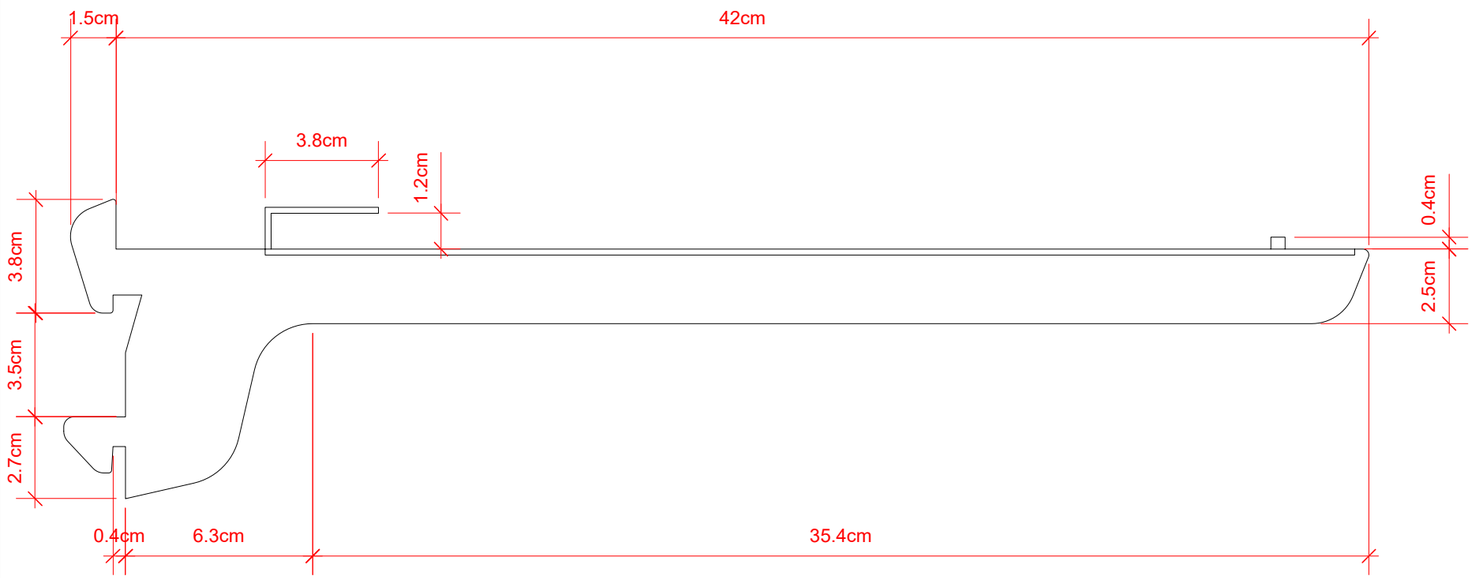

2 Vista Lateral
Scale 1:2

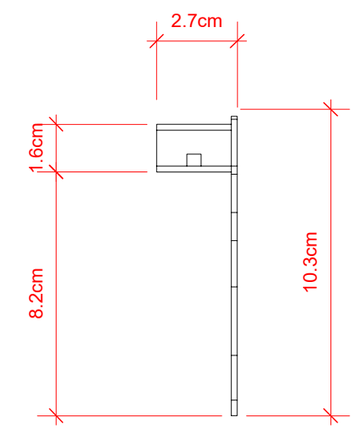

4 Vista Frontal
Scale 1:2

Actualizado:1 de octubre de 2015

No.	Date	Issue Notes	Revision Notes	Date	No.	Zone	Appr

Date 06/05/15
Revision Revision
Project ID MADI
Drawing Code Drawing Code
CAD File Name Muebles_Brissa
Revision Date 00/00/00

Designed By Blanca Castillo
Drawn By Blanca Castillo
Checked By MA
Reviewed By Marcelo Albertal
Submitted By BC
Project Manager Marcelo Albertal

Design Firm
MADI
Calle 88 #10-62 Bogota, DC, Colombia
3017867314
biancacastillog@gmail.com

Consultant
Marcelo Albertal design International

Project Title
Mobiliario BRISSA
2015

Drawn Title
BR-148 Soporte para entrepaño 60 cm
Izquierdo

Scale
Ver escala de cada dibujo

Sheet No.
61
of
83

NOTA: Entrepaño exclusivo para exhibición de almohadas

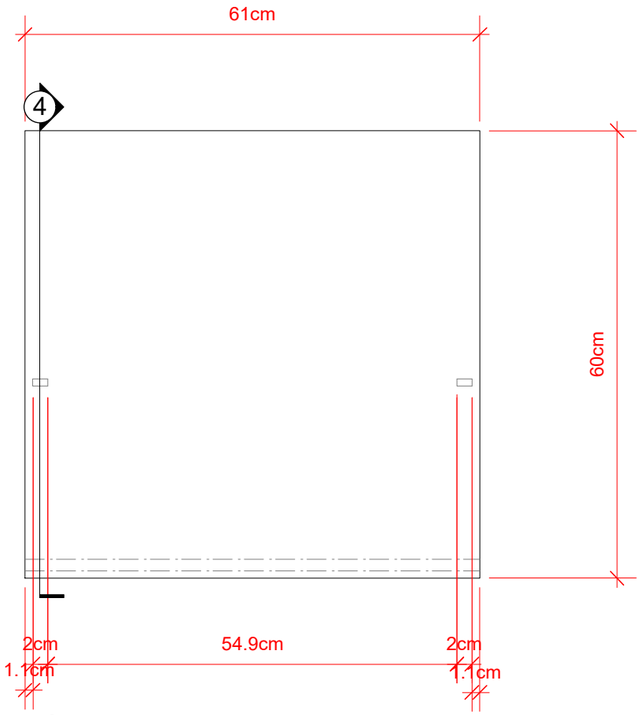

1 Vista Superior
Scale: 1:8

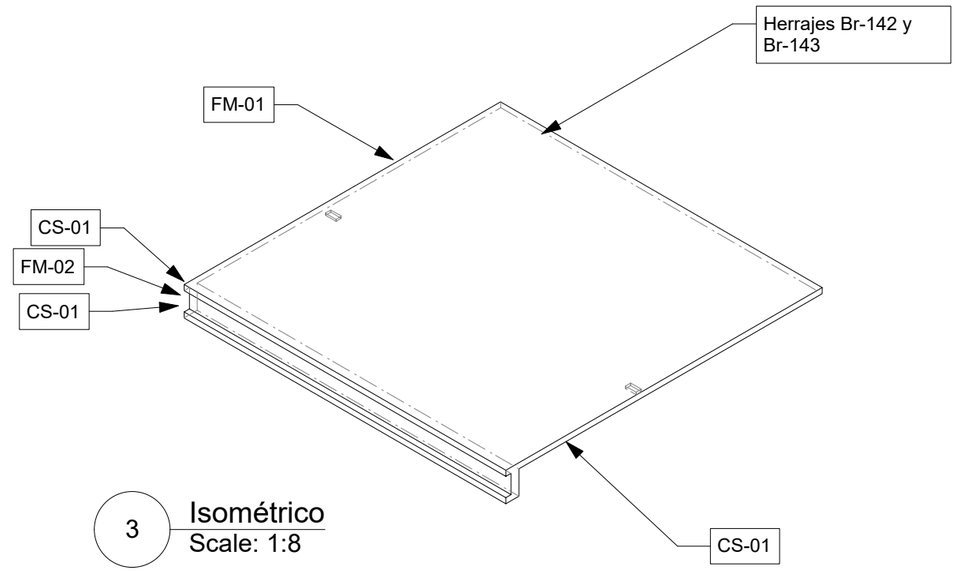

3 Isométrico
Scale: 1:8

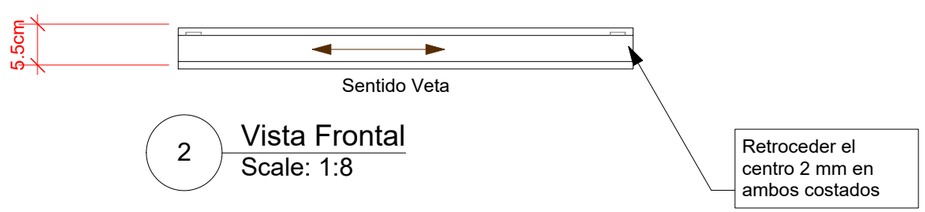

2 Vista Frontal
Scale: 1:8

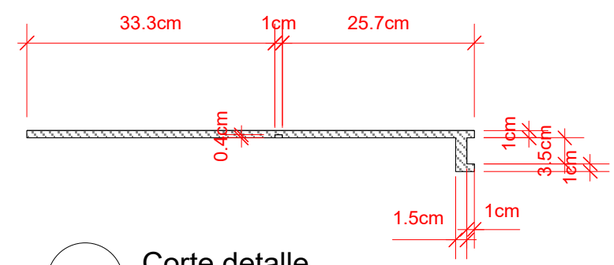

4 Corte detalle
Scale: 1:8

Actualizado:1 de octubre de 2015

No.	Date	Issue Notes	Revision Notes	Zone	Appr

Designed By: Bianca Castillo
Drawn By: Bianca Castillo
Checked By: MA
Reviewed By: Marcelo Albertal
Submitted By: BC
Proj. Manager: Marcelo Albertal

Date: 06/05/15
Revision: Revision
Project ID: MADI
Drawing Code: Drawing Code
CAD File Name: Muebles_Brissa
Project Date: 00/00/00

Design Firm: MADI
Calle 88 #10-62 Bogota, DC, Colombia
3017867314
biancacastilloq@gmail.com

Consultant: Marcelo Albertal design International

Project Title: Mobiliario BRISSA 2015

Sheet Title: BR-169 Entrepaño S6060

Scale: Ver escala de cada dibujo

Sheet No. 62 of 83

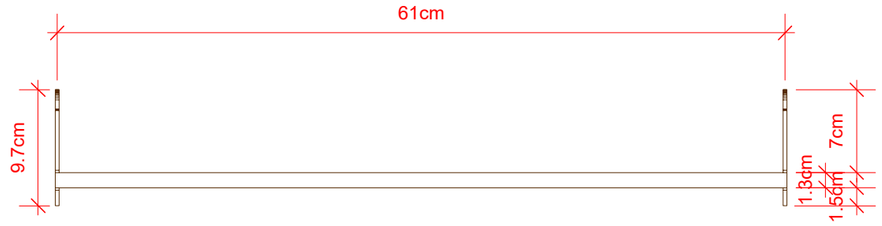

1 Vista Superior
Scale: 1:5

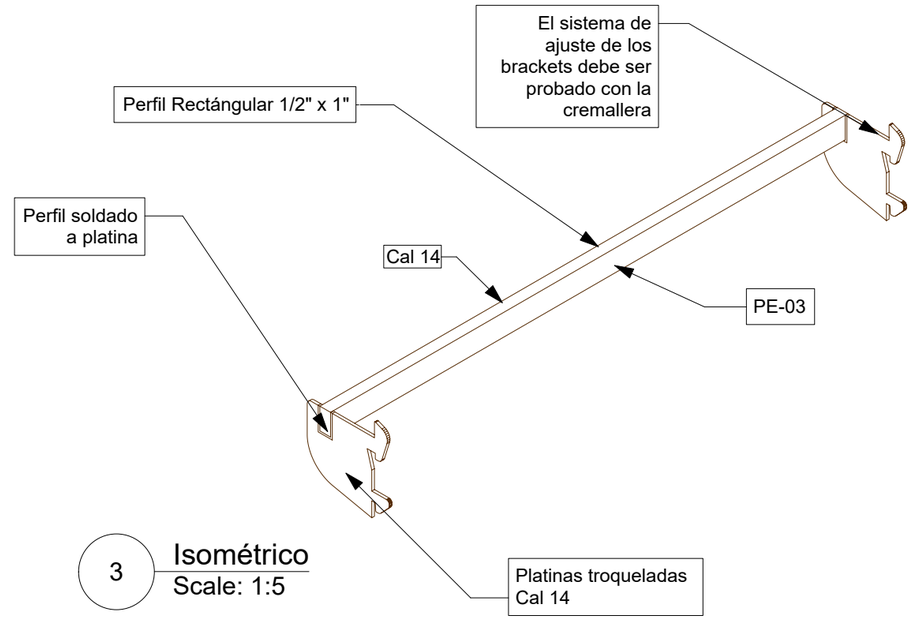

3 Isométrico
Scale: 1:5

2 Vista Frontal
Scale: 1:5

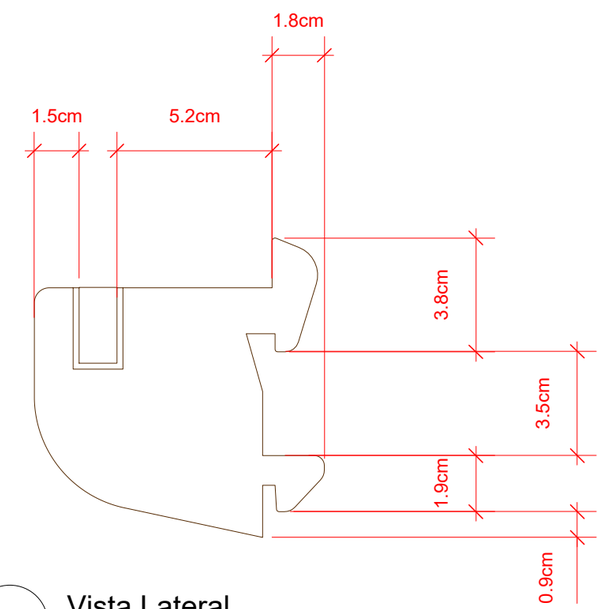

4 Vista Lateral
Scale 1:2

Actualizado: 19 de agosto de 2015

No.	Date	Issue Notes	No.	Date	Revision Notes	Zone	Appr

Designed By: Blanca Castillo
Date: 06/05/15
Drawn By: Blanca Castillo
Revision: Revisión
Checked By: MA
Project ID: MADI
Reviewed By: Marcelo Albertal
Drawing Code
Submitted By: BC
CAD File Name: Muebles_Brissa
Project Manager: Marcelo Albertal
PM Date: 00/00/00

Design Firm: MADI
Calle 88 #10-62 Bogota, DC, Colombia
3017867314
biancacastillog@gmail.com

Consultant: Marcelo Albertal design International

Project Title: Mobiliario BRISSA 2015

Sheet Title: BR-149 Herraje para instalación Kit Cremalleras

Scale: Ver escala de cada dibujo

Sheet No. 63 of 83

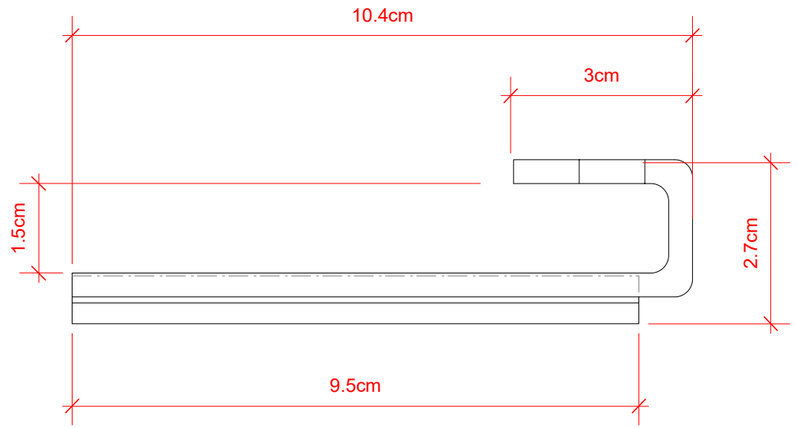

1 Vista Superior
Scale 1:1

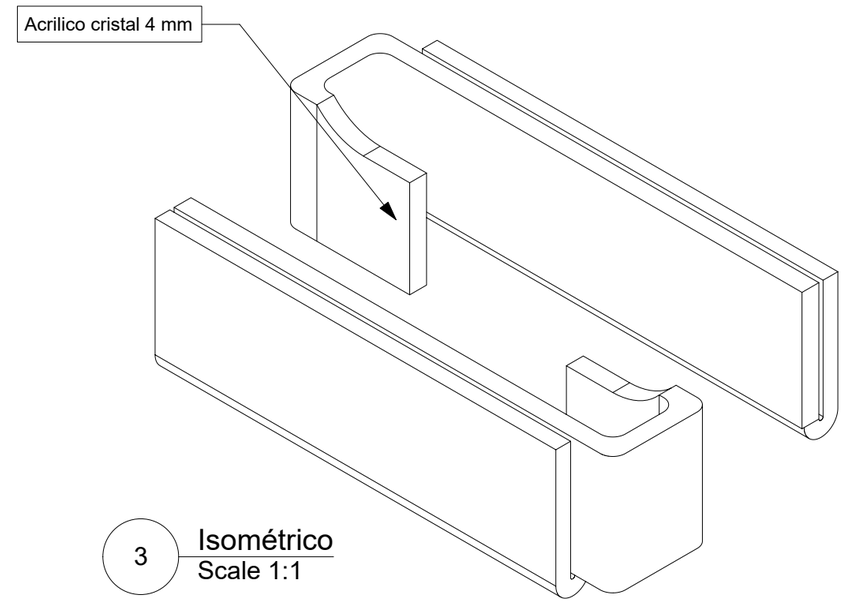

3 Isométrico
Scale 1:1

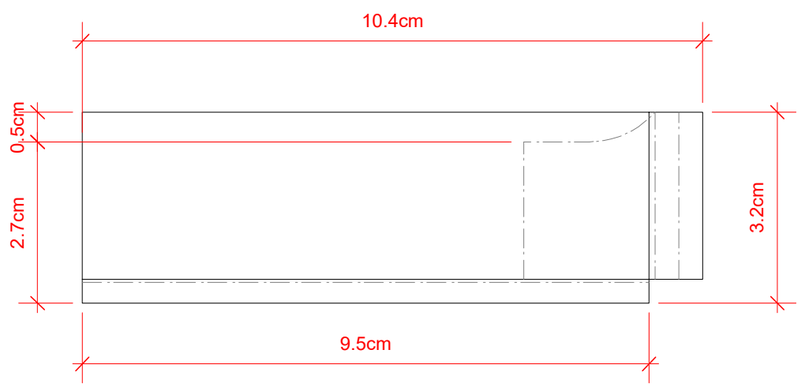

2 Vista Frontal
Scale 1:1

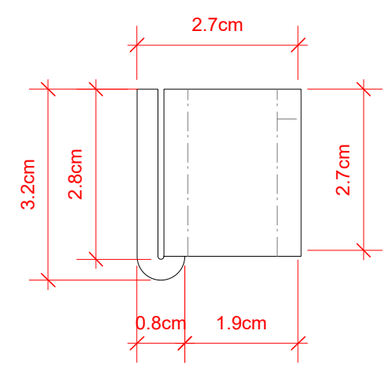

4 Vista Frontal
Scale 1:1

Tamaño del arte: 9.5 x 2.8 cm.

NOTA:
Se debe hacer una muestra y probarla en el entrepaño antes de hacer solicitud de producción.

Actualizado: 9 de septiembre de 2015

No.	Date	Issue Notes	No.	Date	Revision Notes	Zone	Appr

Date 08/05/15
Revision Revisión
Project ID MADI
Drawing Code Drawing Code
CAD File Name Muebles_Brissa
Revision Date 00/00/00

Designed By Blanca Castillo
Drawn By Blanca Castillo
Checked By MA
Reviewed By Marcelo Albertal
Submitted By BC
Project Manager Marcelo Albertal

Design Firm
MADI
Calle 88 #10-62 Bogota, DC, Colombia
3017867314
biancacastilloq@gmail.com

Consultant
Marcelo Albertal design international

Project Title
Mobiliario BRISSA
2015

Sheet Title
BR-170 Portaprecios Entrepaño

Scale
Ver escala de cada dibujo

Sheet No.
64
of
83

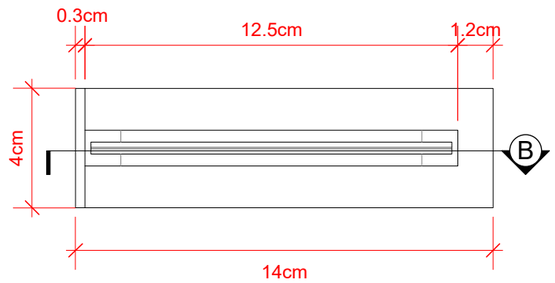

1 Vista Superior
Scale 1:2

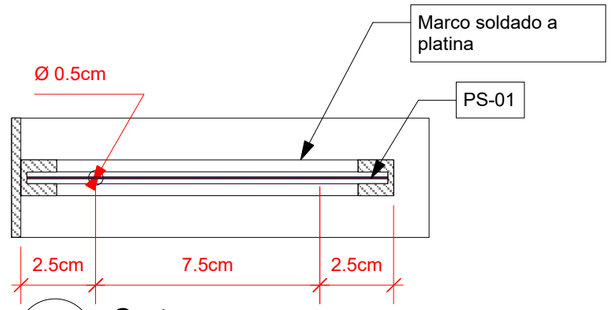

A Corte
Scale 1:2

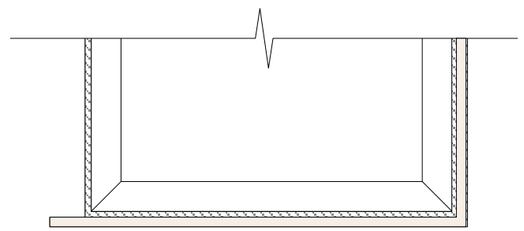

B Corte
Scale 1:2

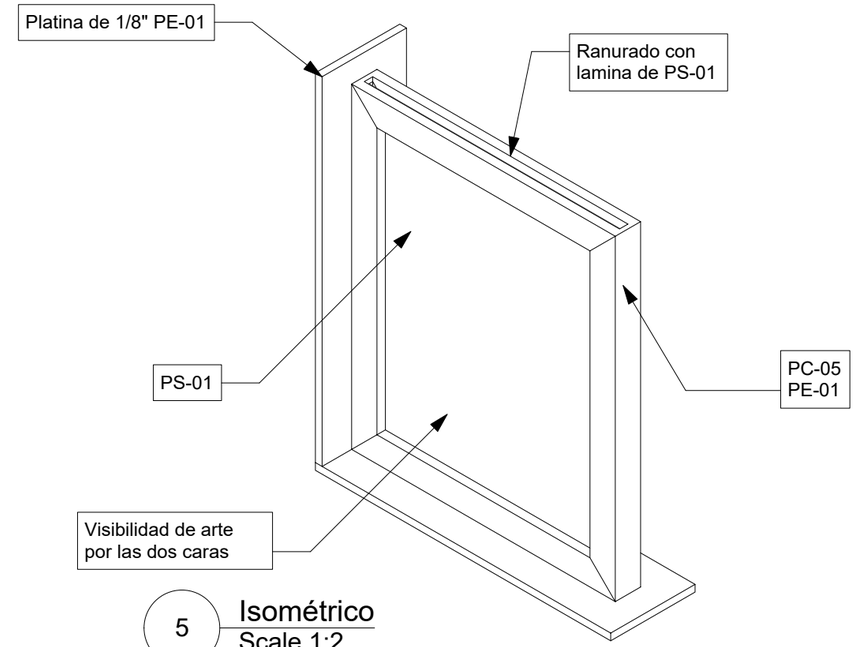

5 Isométrico
Scale 1:2

Tamaño papel 14x10.8 cm.
Tamaño del arte: 12.6x10 cm
(área punteada). Se debe dejar 1 cm en contorno libre de textos.

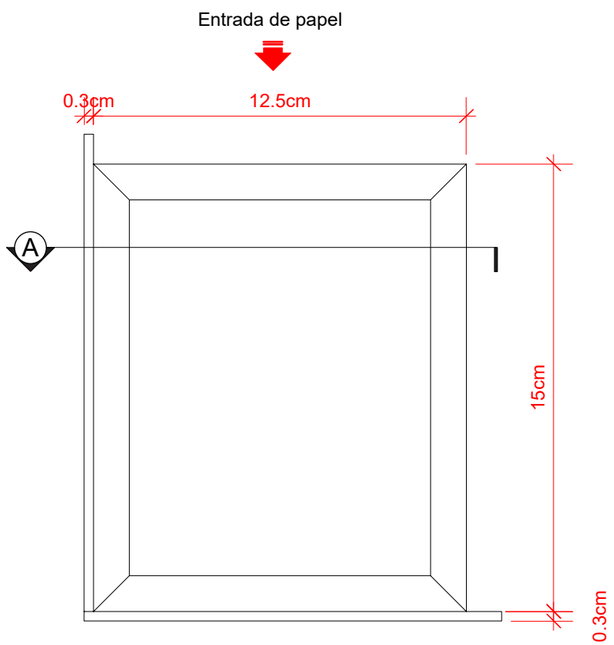

2 Vista Frontal
Scale 1:2

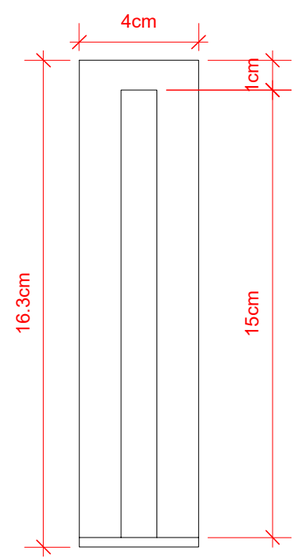

3 Vista Frontal
Scale 1:2

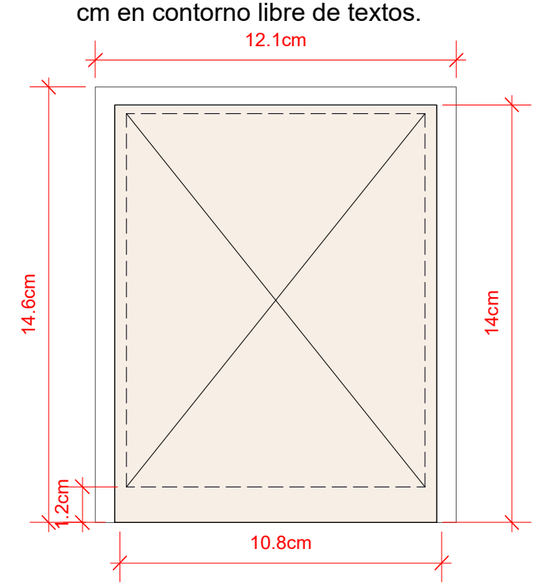

4 Tamaño PS & Papel
Scale 1:2

Actualizado:15 de octubre de 2015

No.	Date	Revision Notes	Zone	Appr

No.	Date	Issue Notes

Designed By: Blanca Castillo	Date: 06/05/15	Revision: Revision
Drawn By: Blanca Castillo	Checked By: MA	Project ID: MADI
Reviewed By: Marcelo Albertal	Drawing Code: Drawing Code	
Submitted By: BC	CAD File Name: Muebles_Brissa	
Project Manager: Marcelo Albertal	Revision: 00/00/00	

Design Firm
MADI
Calle 88 #10-62 Bogota, DC, Colombia
3017867314
biancacastillog@gmail.com

Consultant
Marcelo Albertal design International

Project Title
Mobiliario BRISSA 2015

Sheet Title
BR-171 Hablador de mesa 10.5

Scale
Ver escala de cada dibujo

Sheet No.
65
of
83

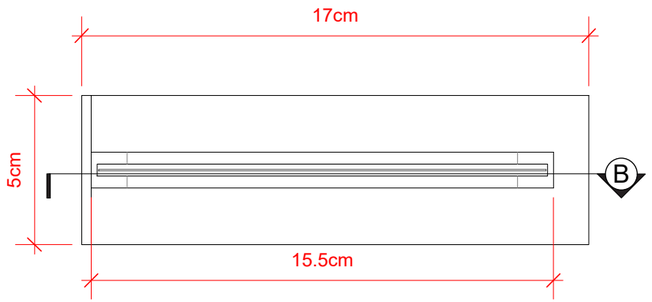

1 Vista Superior
Scale 1:2

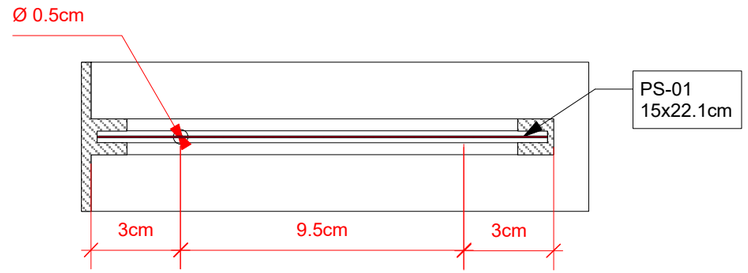

A Corte Horizontal
Scale 1:2

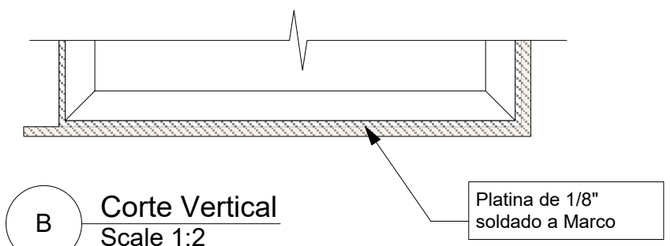

B Corte Vertical
Scale 1:2

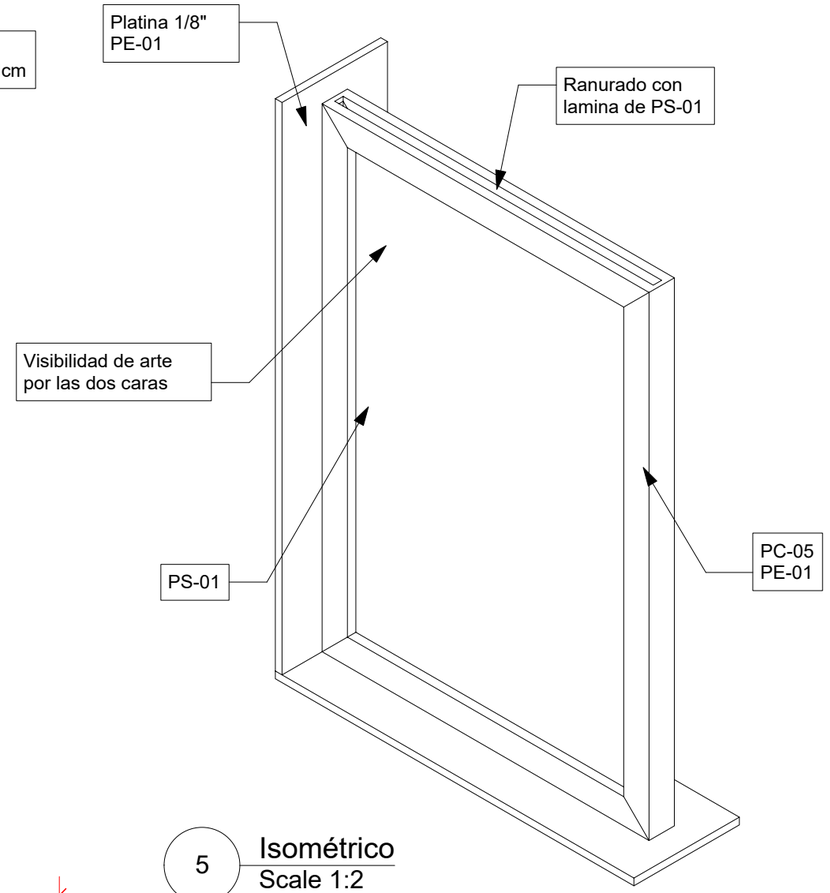

5 Isométrico
Scale 1:2

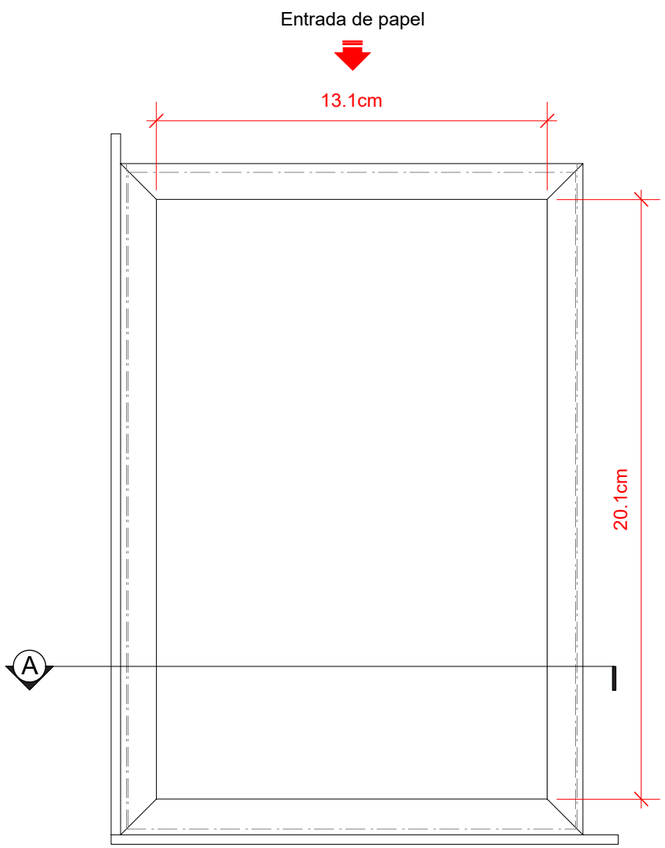

2 Vista Frontal
Scale 1:2

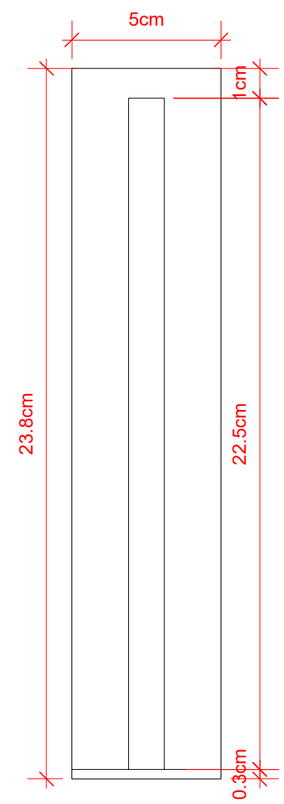

3 Vista Frontal
Scale 1:2

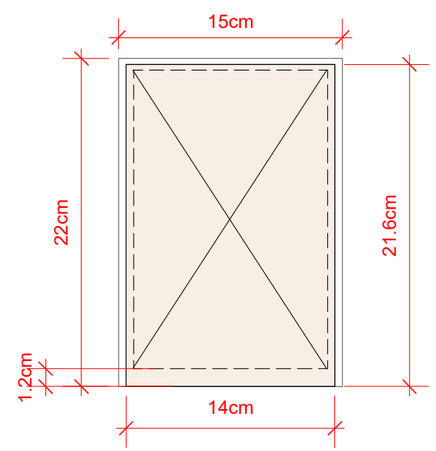

4 Tamaño PS & Papel
Scale: 1:4

Tamaño papel 14x21.6 cm.
Tamaño del arte: 13 x20 cm (área punteada). Se debe dejar 1 cm en contorno libre de textos.

Actualizado:15 de octubre de 2015

Designed By	Bianca Castillo
Date	06/03/15
Drawn By	Bianca Castillo
Revision	Revisión
Checked By	MA
Project ID	MADI
Reviewed By	Marcelo Albertal
Drawing Code	Drawing Code
Submitted By	BC
CAD File Name	Muebles_Brissa
Project Manager	Marcelo Albertal
Pick Date	00/00/00

Appr | Zone | Revision Notes | Date | No. | Issue Notes | Date | No.

Design Firm
MADI
Calle 88 #10-62 Bogota, DC, Colombia
3017867314
biancacastillog@gmail.com

Consultant
Marcelo Albertal design International

Project Title
Mobiliario BRISSA
2015

Sheet Title
BR-172 Hablador de mesa 14

Scale
Ver escala de cada dibujo

Sheet No.
66
of
83

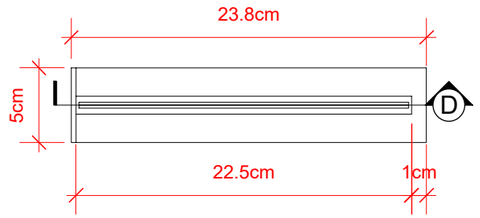

1 Vista Superior
Scale: 1:4

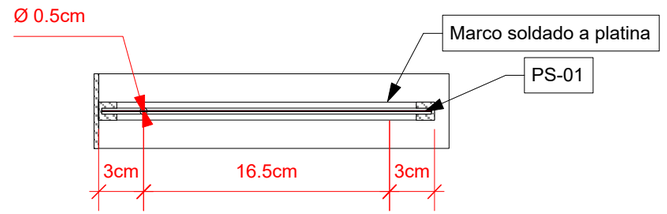

C Corte Horizontal
Scale: 1:4

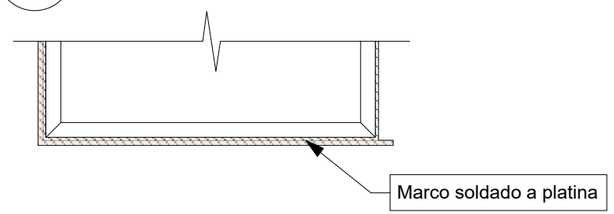

D Corte Vertical
Scale: 1:4

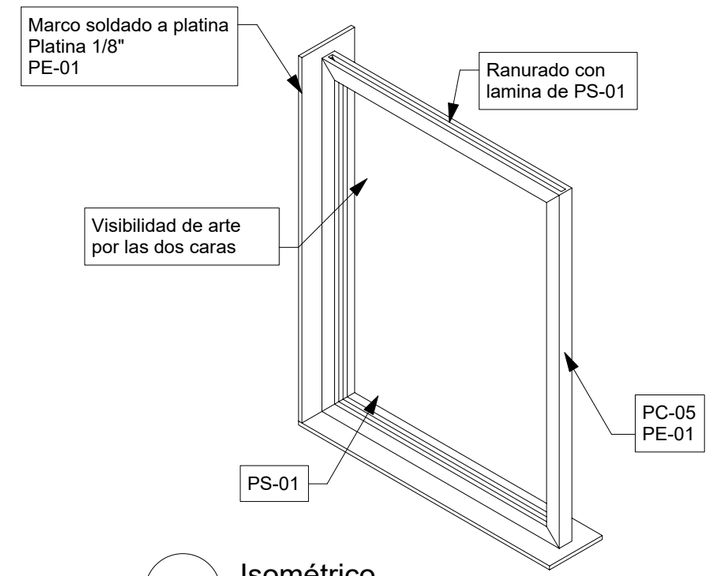

5 Isométrico
Scale: 1:4

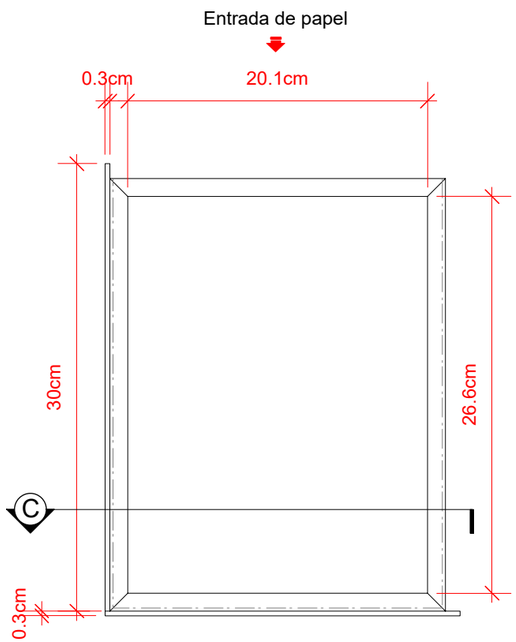

2 Vista Frontal
Scale: 1:4

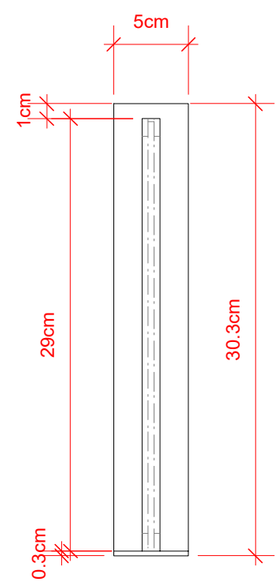

3 Vista Lateral
Scale: 1:4

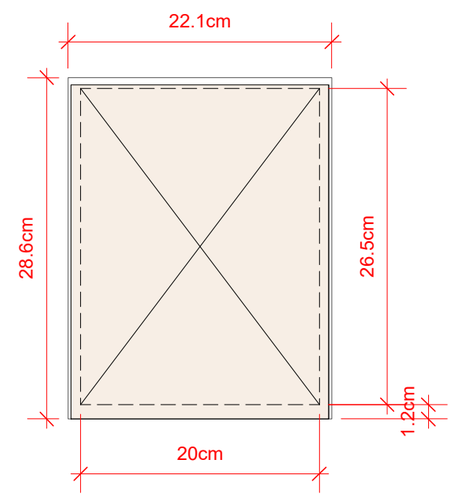

4 Tamaño PS & Papel
Scale 1:2

Tamaño papel 21.6x28 cm.
Tamaño del arte: 20x26.5 cm
(área punteada). Se debe dejar 1
cm en contorno libre de textos.

Actualizado:15 de octubre de 2015

No.	Date	Issue Notes	No.	Date	Revision Notes	Zone	Appr

Date 06/05/15
Revision Revisión
Project ID MADI
Drawing Code Drawing Code
CAD File Name Muebles_Brissa
Plot Date 00/00/00

Designed By Blanca Castillo
Drawn By Blanca Castillo
Checked By MA
Reviewed By Marcelo Albertal
Submitted By BC
Project Manager Marcelo Albertal

Design Firm
MADI
Calle 88 #10-62 Bogota, DC, Colombia
3017867314
biancacastilloq@gmail.com

Consultant
Marcelo Albertal design International

Project Title
Mobiliario BRISSA
2015

Sheet Title
BR-173 Hablador de mesa 21

Scale
Ver escala de cada dibujo

Sheet No.
67
of
83

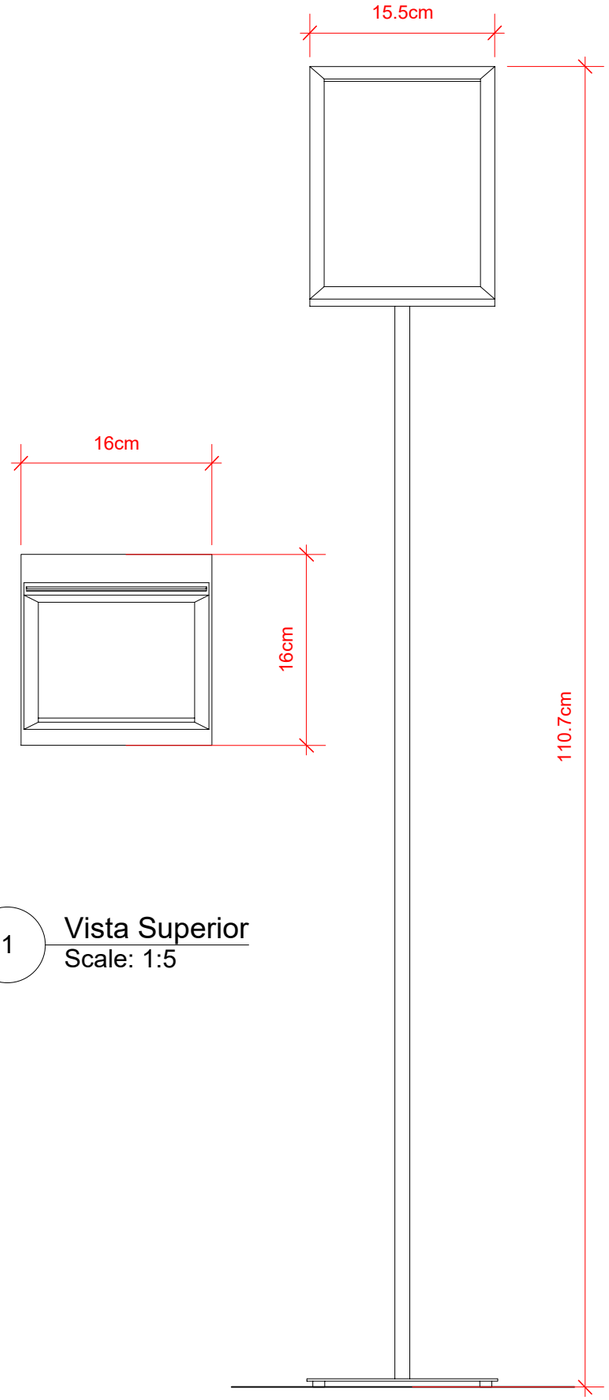

1 Vista Superior
Scale: 1:5

2 Vista Frontal
Scale: 1:5

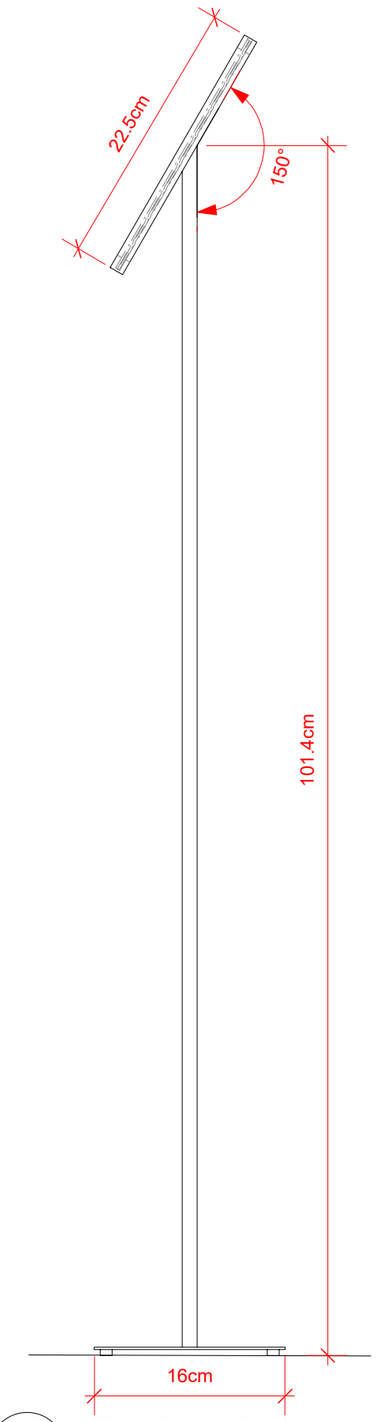

3 Vista Lateral
Scale: 1:5

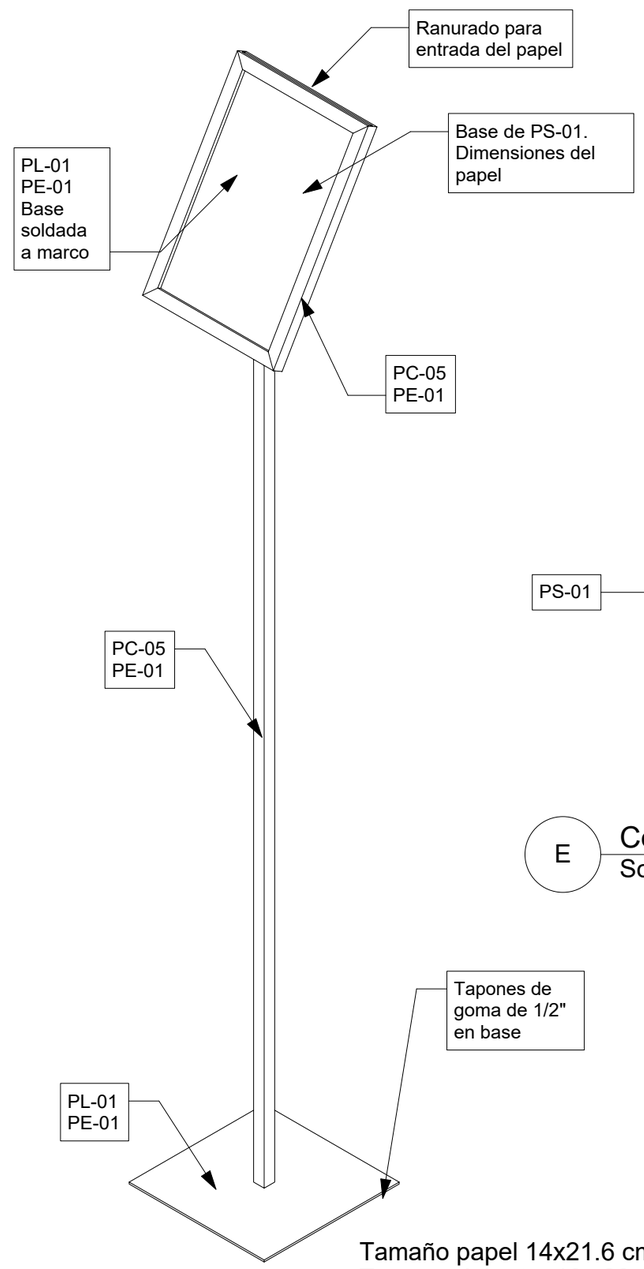

4 Isométrico
Scale: 1:5

Tamaño papel 14x21.6 cm.
Tamaño del arte: 13 x20 cm (área punteada). Se debe dejar 1 cm en contorno libre de textos.

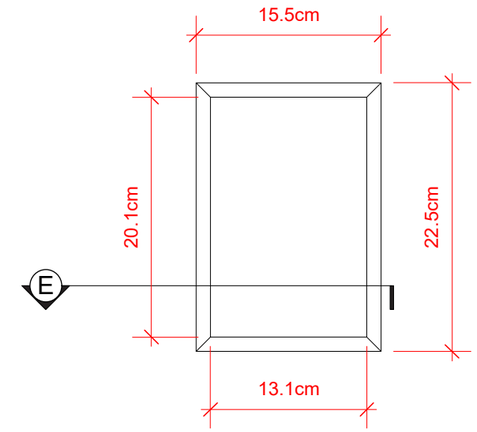

5 Vista Frontal
Scale: 1:5

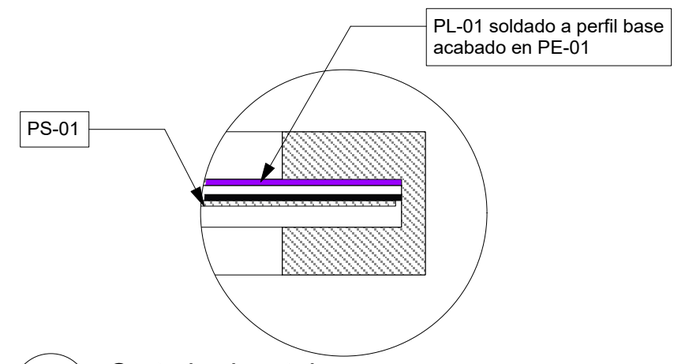

E Corte horizontal
Scale 1:1

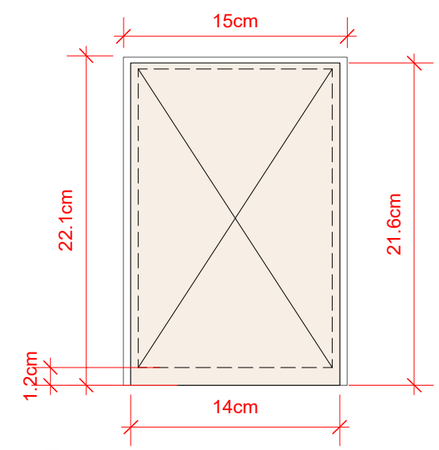

6 Tamaño PS & Papel
Scale: 1:4

Actualizado:1 de octubre de 2015

No.	Date	Issue Notes	No.	Date	Revision Notes	Zone	Appr

Designed By: Blanca Castillo	Date: 06/05/15	Revision: Revision	Drawing Code
Drawn By: Blanca Castillo	Project ID: MADI		
Checked By: MA	Drawing Code: Drawing Code		
Reviewed By: Marcelo Albertal	CAD File Name: Muebles_Brissa		
Submitted By: BC	Project Title: Mobiliario BRISSA 2015		
Project Manager: Marcelo Albertal	Sheet Title: BR-174 Hablador de piso 14		

Design Firm: MADI
Calle 88 #10-62 Bogota, DC, Colombia
3017867314
biancacastillog@gmail.com
Consultant: Marcelo Albertal design International

Scale: Ver escala de cada dibujo

Sheet No. 68 of 83

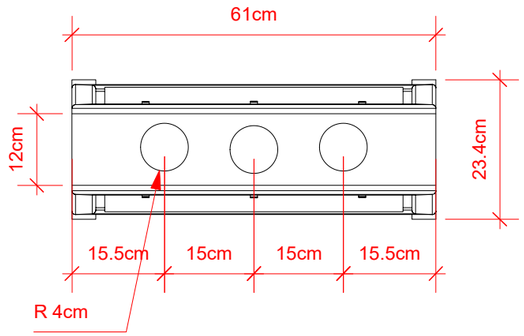

1 Vista Superior
Scale: 1:10

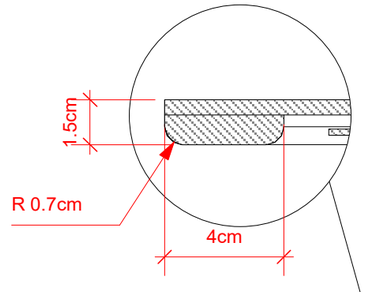

A Scale 1:2
Corte Marco

Tamaño del papel: 50x70 cm.
Tamaño del arte50x70cm (área punteada).

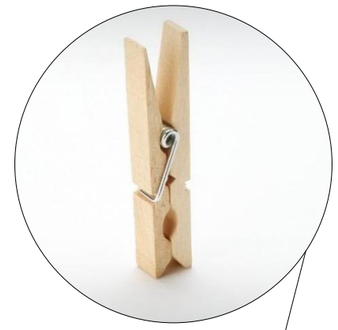

B Pinza de madera

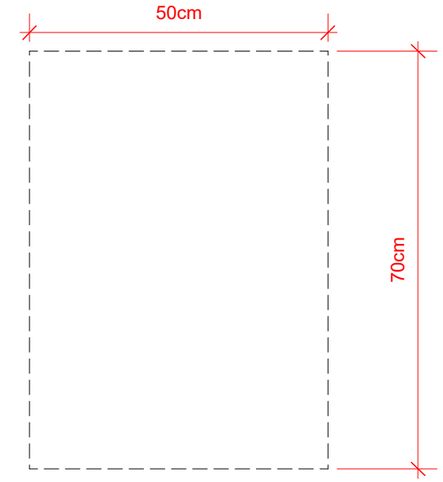

5 Tamaño del papel
Scale: 1:10

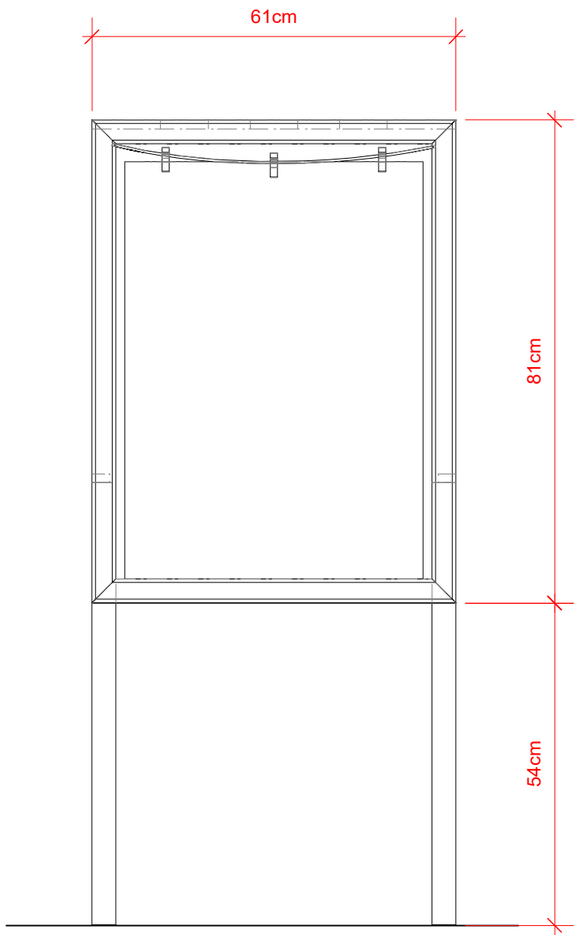

2 Vista Frontal
Scale: 1:10

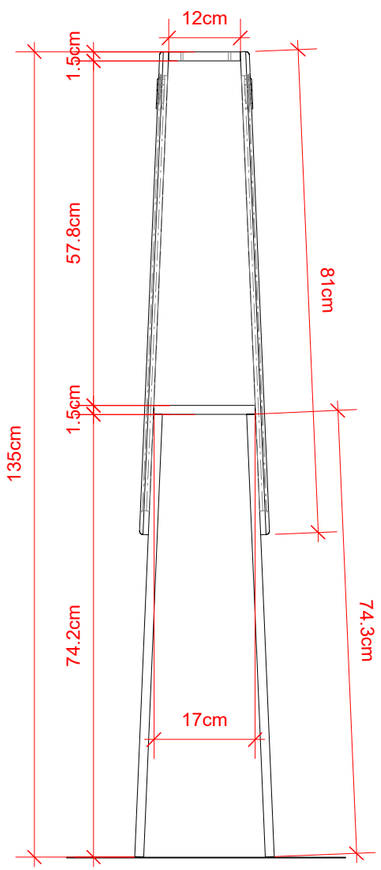

3 Vista Lateral
Scale: 1:10

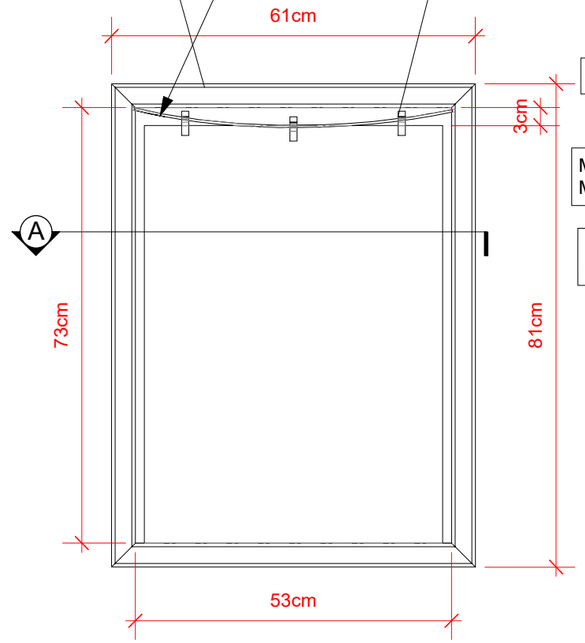

4 Vista Frontal Marco
Scale: 1:10

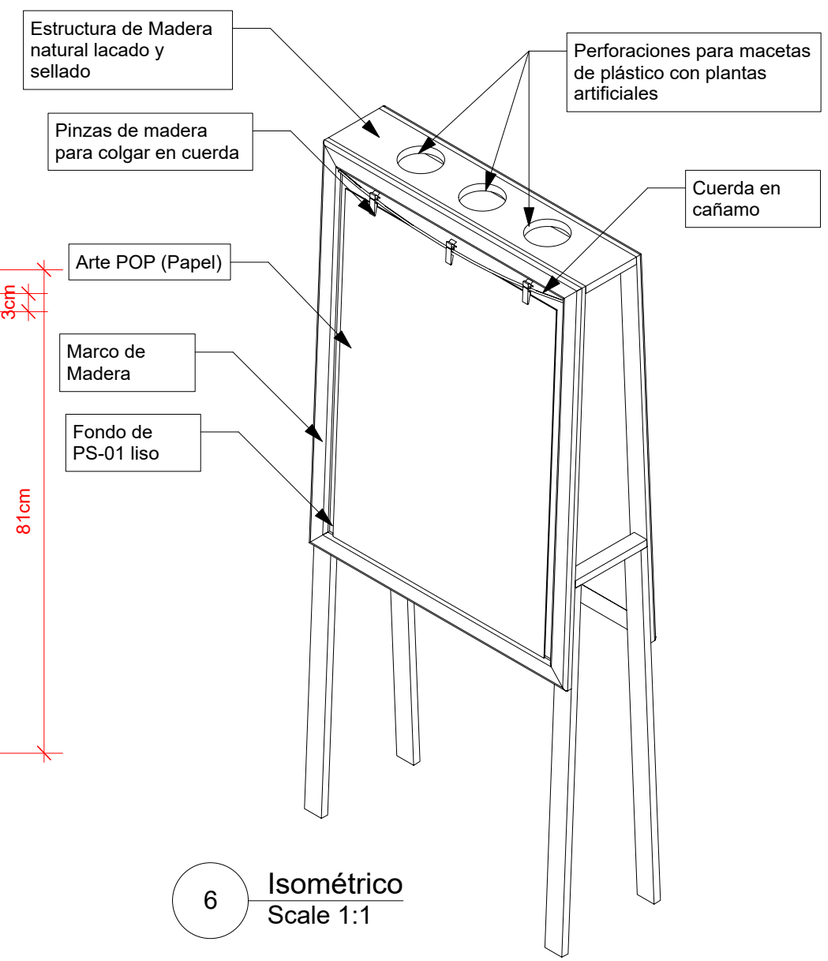

6 Isométrico
Scale 1:1

Actualizado:15 de octubre de 2015

Designed By	Blanca Castillo
Drawn By	Blanca Castillo
Checked By	MA
Reviewed By	Marcelo Albertal
Submitted By	BC
Project Manager	Marcelo Albertal
Date	06/05/15
Revision	Revision
Project ID	MADI
Drawing Code	Drawing Code
CAD File Name	Muebles_Brissa
Project Number	000/000

Design Firm: MADI
Calle 88 #10-62 Bogota, DC, Colombia
3017867314
biancacastillog@gmail.com

Consultant: Marcelo Albertal design international

Project Title: Mobiliario BRISSA 2015

Sheet Title: BR-175 Portacampaña 50

Scale: Ver escala de cada dibujo

Sheet No. 69 of 83

Tamaño del papel: 70x70 cm.Tamaño del arte: 68.5 ancho x 68 alto cm (área punteada). Se deben dejar 2 cm en contorno libres de textos.

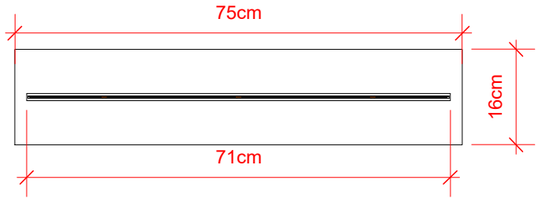

1 Vista Superior
Scale: 1:10

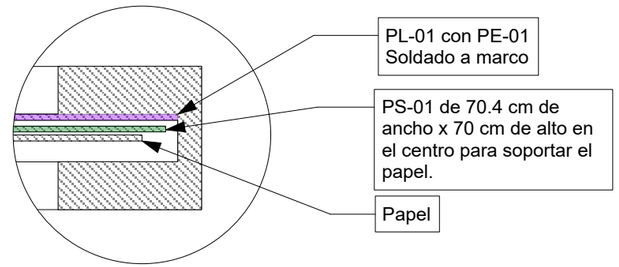

A Corte
Scale 2:1

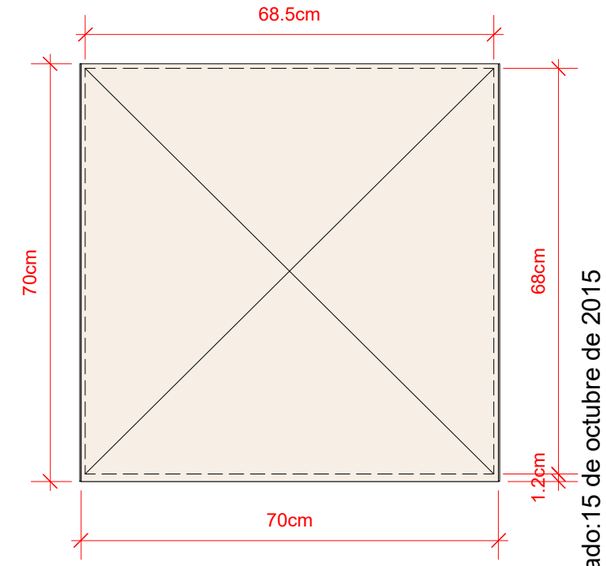

5 Tamaño PS & Papel
Scale: 1:10

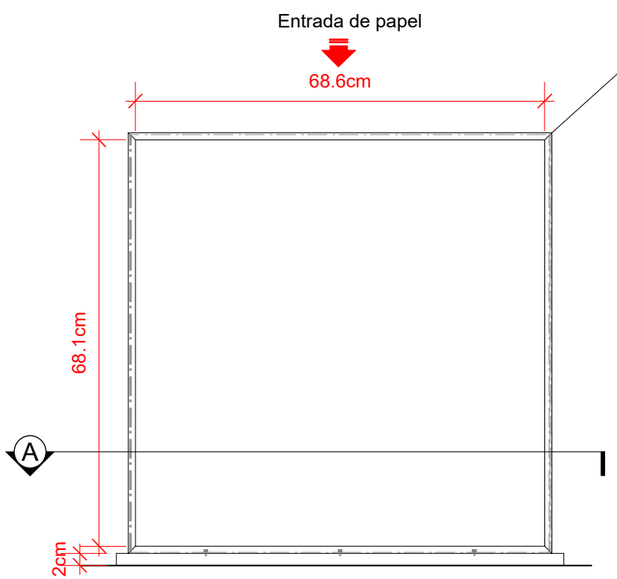

2 Vista Frontal
Scale: 1:10

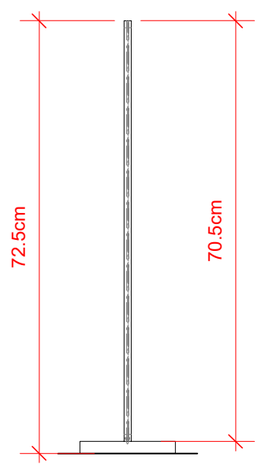

3 Vista Lateral
Scale: 1:10

4 Visualización
Scale: Actual Size

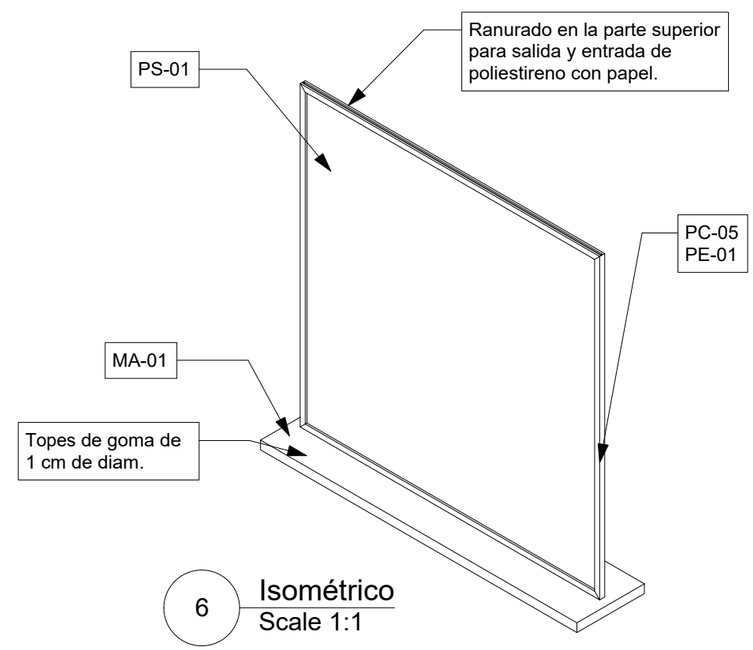

6 Isométrico
Scale 1:1

Actualizado:15 de octubre de 2015

No.	Date	Issue Notes	No.	Date	Revision Notes	Zone	Appr

Date 06/05/15
Revision Revisión
Project ID MADI
Drawing Code Drawing Code
CAD File Name Muebles_Brissa
Print Date 00/00/00

Designed By Bianca Castillo
Drawn By Bianca Castillo
Checked By MA
Reviewed By Marcelo Albertal
Submitted By BC
Project Manager Marcelo Albertal

Design Firm
MADI
Calle 88 #10-62 Bogota, DC, Colombia
3017867314
biancacastillog@gmail.com

Consultant
Marcelo Albertal design International

Project Title
Mobiliario BRISSA 2015

Sheet Title
BR-176 Portacampaña 70

Scale
Ver escala de cada dibujo

Sheet No.
70
of
83

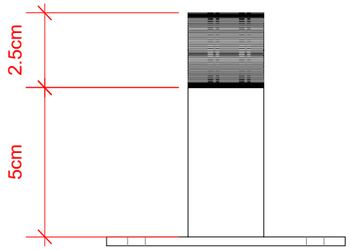

1 Scale 1:2
Vista Superior

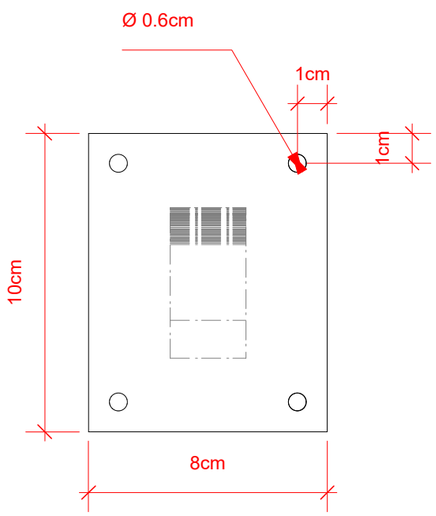

2 Scale 1:2
Vista Frontal

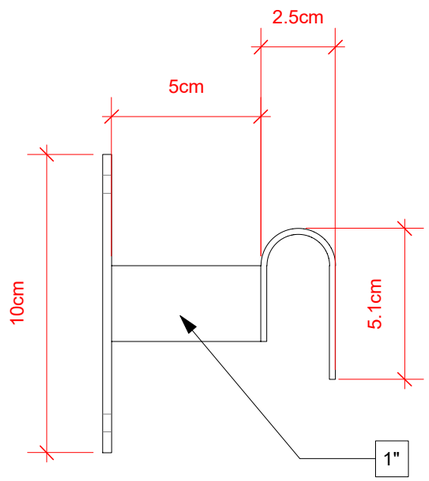

3 Scale 1:2
Vista Lateral

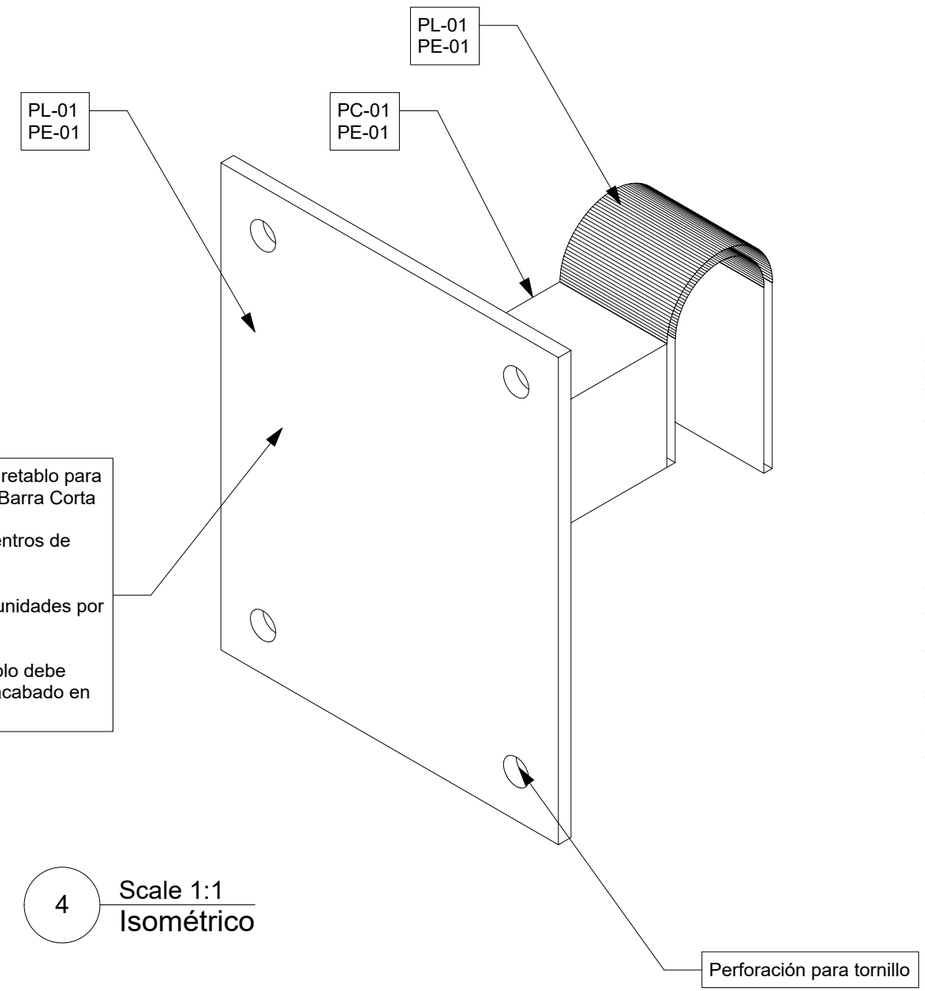

4 Scale 1:1
Isométrico

Actualizado: 9 de septiembre de 2015

No.	Date	Issue Notes	No.	Date	Revision Notes	Zone	Appr

Date 06/05/15
Revision Revision
Project ID MADI
Drawing Code Drawing Code
CAD File Name Muebles_Brissa
Project Date 00/00/00

Designed By Bianca Castillo
Drawn By Bianca Castillo
Checked By MA
Reviewed By Marcelo Albertal
Submitted By BC
Project Manager Marcelo Albertal

Design Firm
MADI
Calle 88 #10-62 Bogota, DC, Colombia
3017867314
biancacastillog@gmail.com

Consultant
Marcelo Albertal design International

Project Title
Mobiliario BRISSA
2015

Sheet Title
BR-177 Herraje para retablos

Scale
Ver escala de cada dibujo

Sheet No.
71
of
83

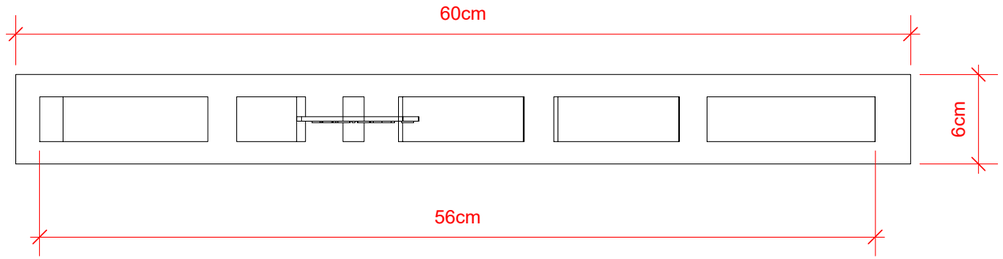

1 Vista Superior
Scale: 1:4

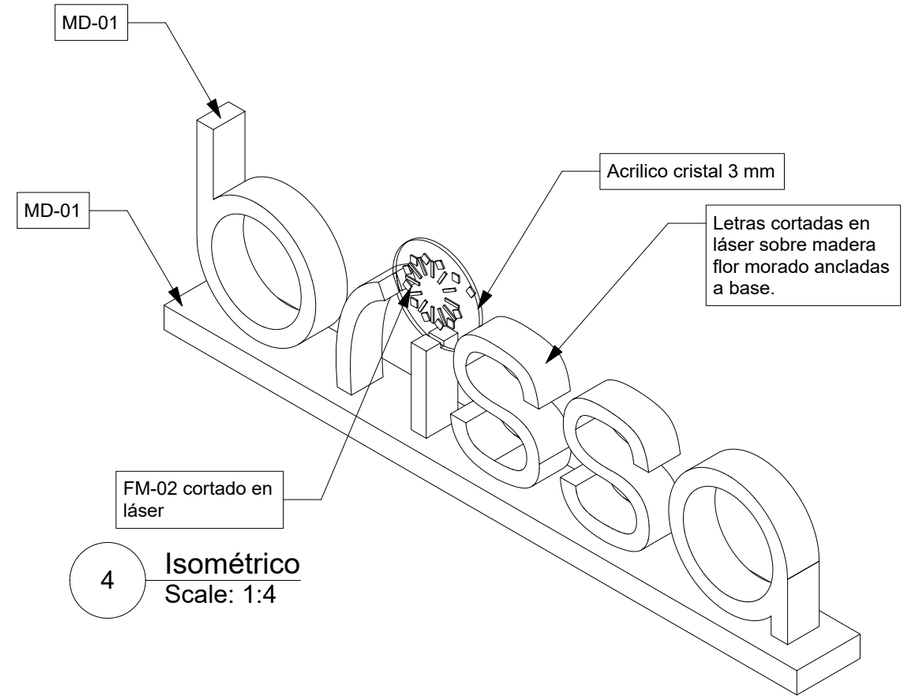

4 Isométrico
Scale: 1:4

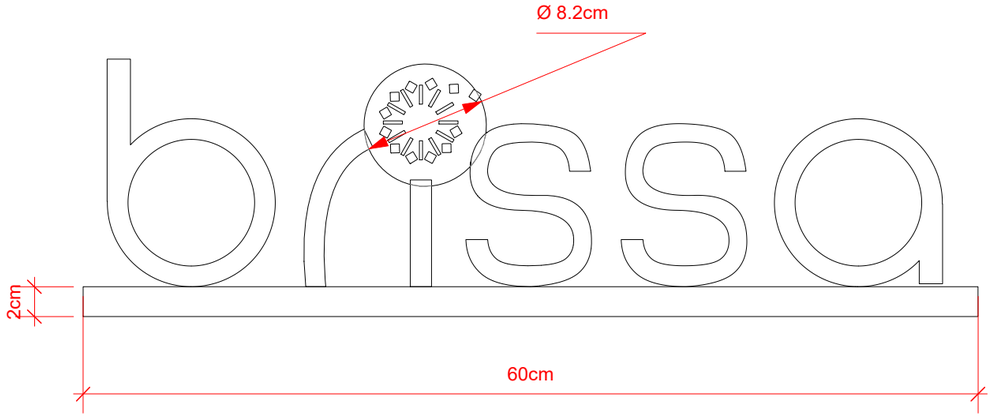

2 Vista Frontal
Scale: 1:4

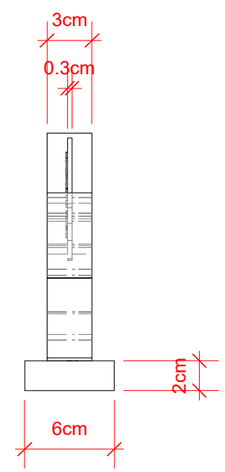

3 Vista Lateral
Scale: 1:4

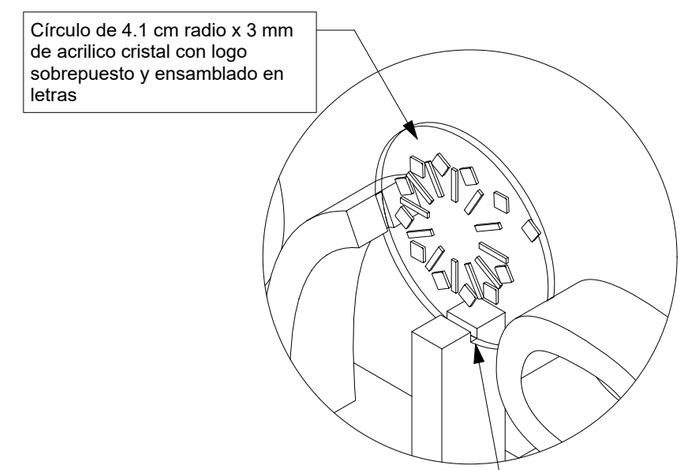

5 Detalle base acrilico
Scale 1:1

Solicitar archivo de artes en curvas para corte del LOGO

Actualizado:1 de octubre de 2015

No.	Date	Issue Notes	No.	Date	Revision Notes	Zone	Appr

Date 06/05/15
Revision Revision
Project ID MADI
Drawing Code Drawing Code
CAD File Name Muebles_Brissa
Project Date 00/00/00

Designed By Blanca Castillo
Drawn By Blanca Castillo
Checked By MA
Reviewed By Marcelo Albertal
Submitted By BC
Project Manager Marcelo Albertal

Design Firm MADI
Calle 88 #10-62 Bogota, DC, Colombia
3017867314
biancacastillog@gmail.com

Consultant Marcelo Albertal design International

Project Title Mobiliario BRISSA 2015

Sheet Title BR-178 Logotipo 60

Scale Ver escala de cada dibujo

Sheet No. 72 of 83

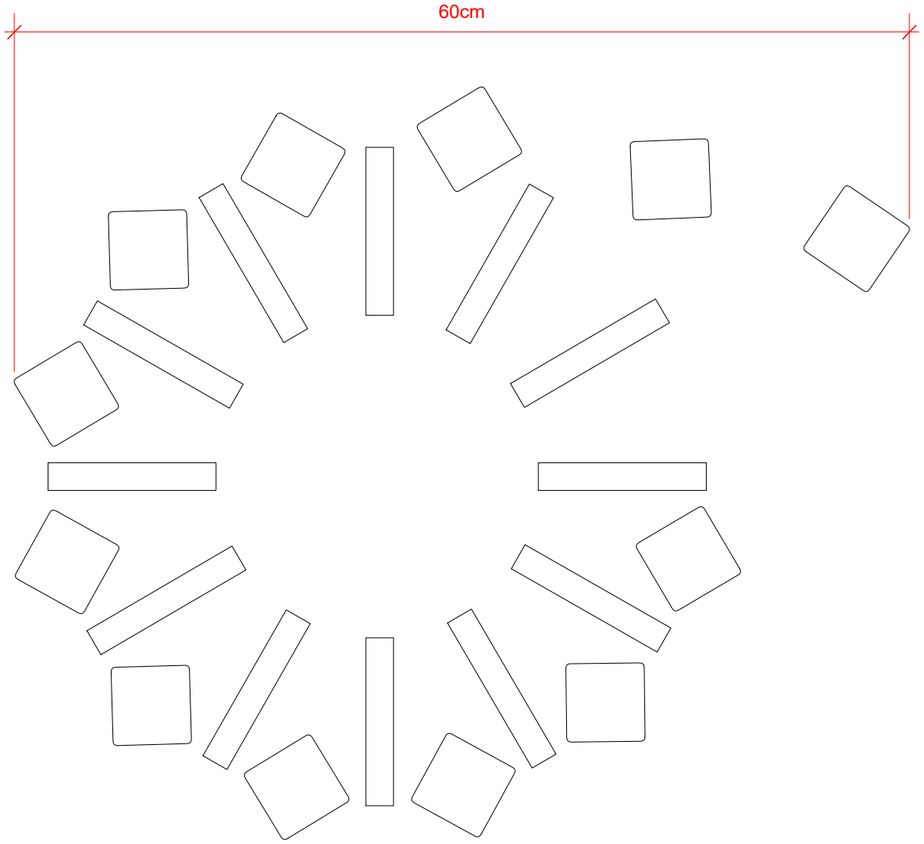

1 Vista Frontal
Scale: 1:4

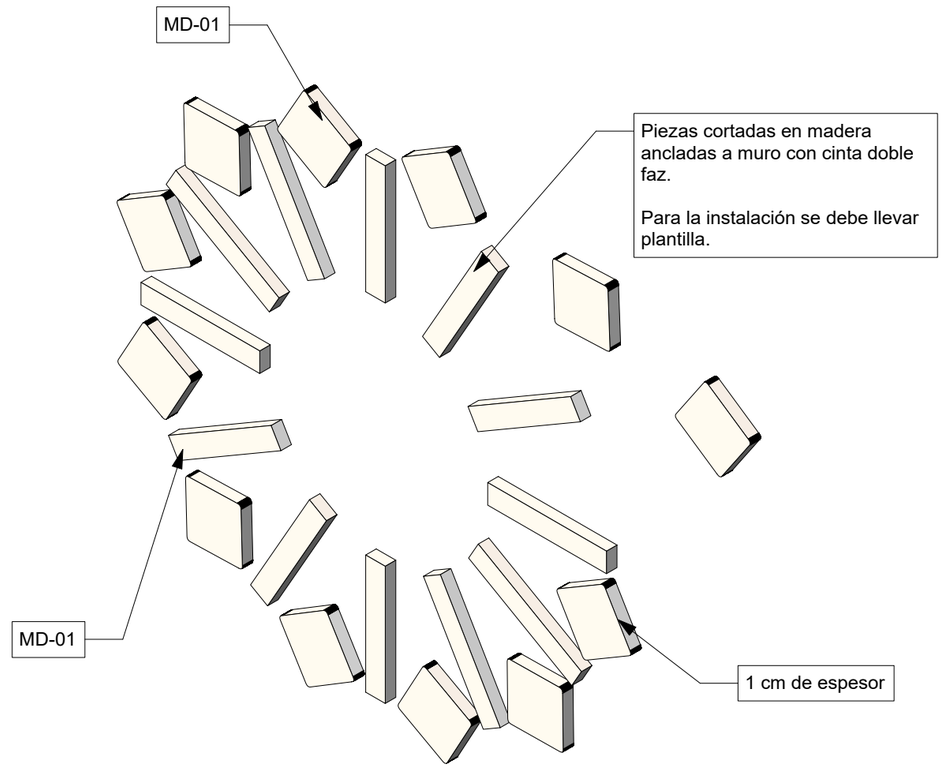

2 Isométrico
Scale 1:1

Actualizado: 9 de septiembre de 2015

Solicitar archivo de artes en curvas para corte del LOGO

No.	Date	Issue Notes	No.	Date	Revision Notes	Zone	Appr

Designed By: Bianca Castillo
Date: 06/03/15
Drawn By: Bianca Castillo
Revision: Revision
Checked By: MA
Project ID: MADI
Reviewed By: Marcelo Albertal
Drawing Code: Drawing Code
Submitted By: BC
CAD File Name: Muebles_Brissa
Project Manager: Marcelo Albertal
PKG Date: 00/00/00

Design Firm: MADI
Calle 88 #10-62 Bogota, DC, Colombia
3017867314
biancacastillog@gmail.com

Consultant: Marcelo Albertal design International

Project Title: Mobiliario BRISSA 2015

Sheet Title: BR-179 Monograma

Scale: Ver escala de cada dibujo

Sheet No. 73 of 83

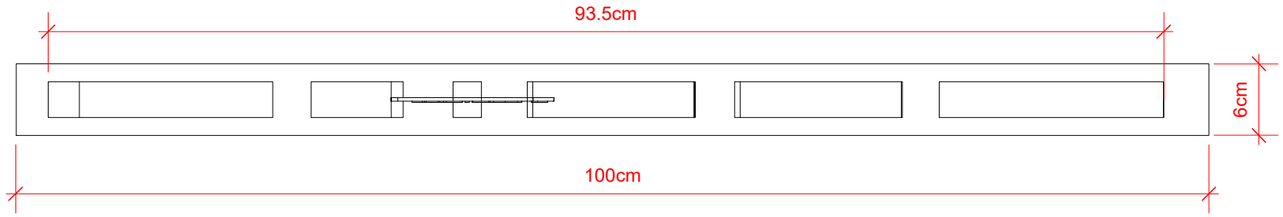

1 Vista Superior
Scale: 1:5

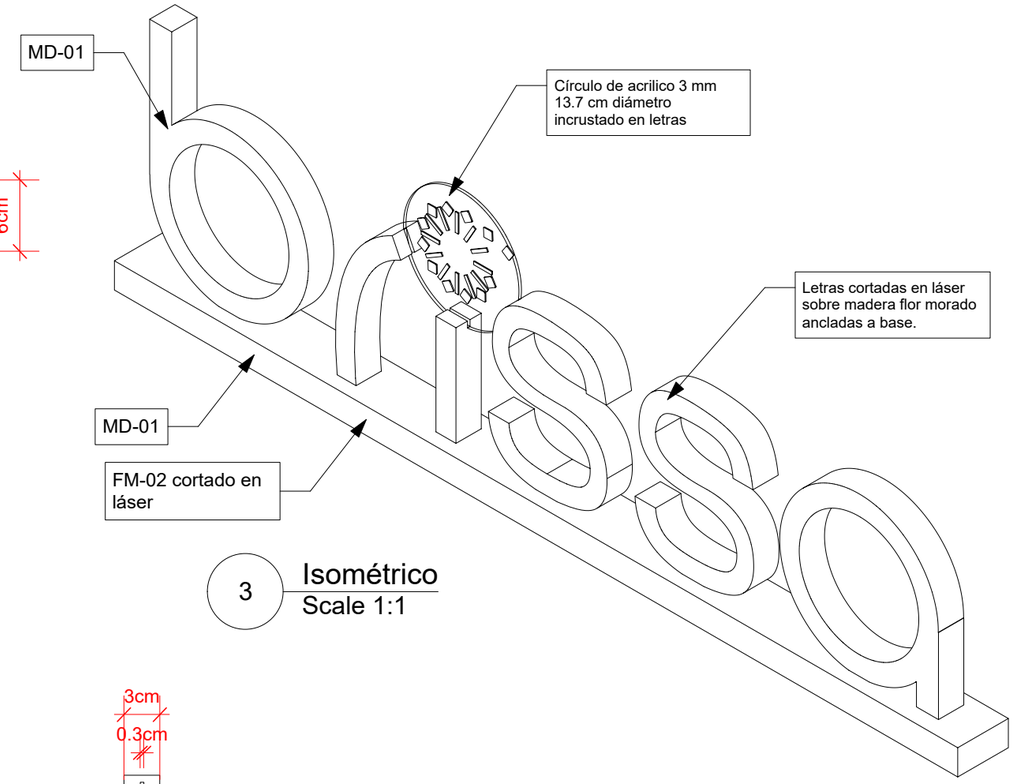

3 Isométrico
Scale 1:1

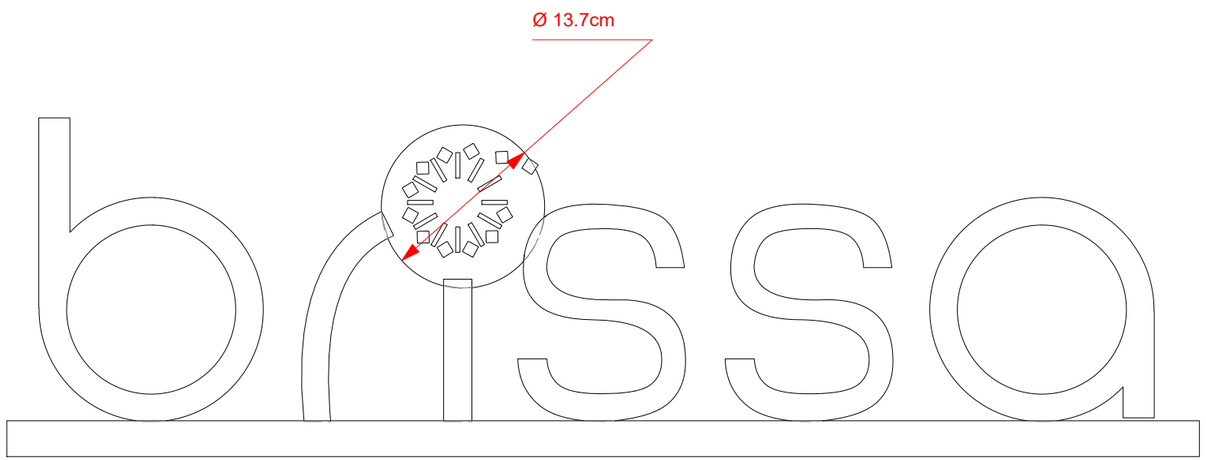

2 Vista Frontal
Scale: 1:5

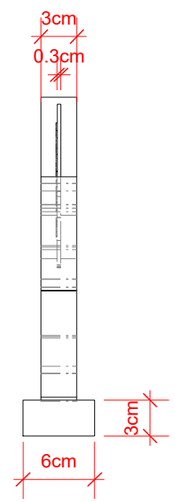

4 Vista Lateral
Scale: 1:5

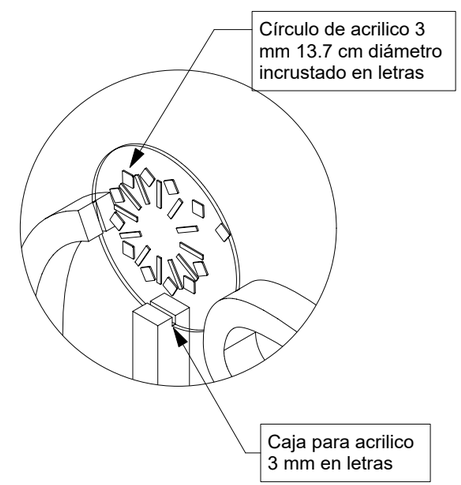

5 Detalle base acrílico
Scale: 1:4

Solicitar archivo de artes en curvas para corte del LOGO

Actualizado:1 de octubre de 2015

Designed By: Bianca Castillo	Date: 06/05/15	Revision: Revisión	
Drawn By: Bianca Castillo	Project ID: MADI		
Checked By: MA	Drawing Code: Drawing Code		
Reviewed By: Marcelo Albertal	CAD File Name: Muebles_Brissa		
Submitted By: BC	Project Manager: Marcelo Albertal	PO/Code: 00/00/00	

Design Firm: MADI
Calle 88 #10-62 Bogota, DC, Colombia
3017867314
biancacastillog@gmail.com

Consultant: Marcelo Albertal design International

Project Title: Mobiliario BRISSA 2015

Sheet Title: BR-180 Logotipo 100

Scale: Ver escala de cada dibujo

Sheet No. 74 of 83

No.	Date	Issue Notes	No.	Date	Revision Notes	Zone	Appr

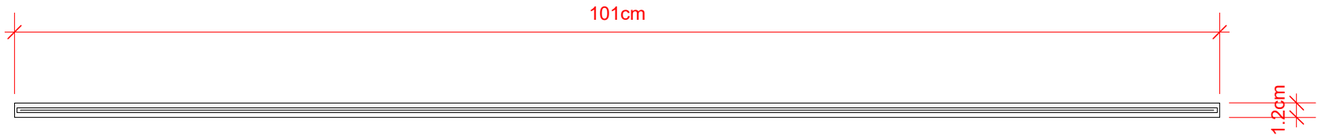

1 Vista Superior
Scale: 1:5

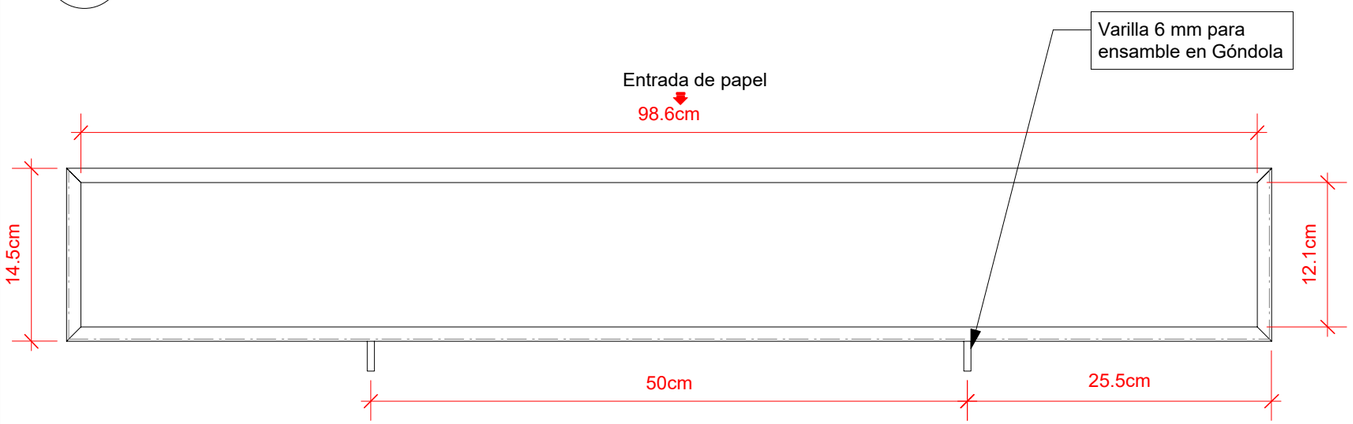

2 Vista Frontal
Scale: 1:5

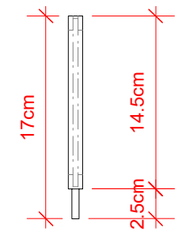

4 Vista Lateral
Scale: 1:5

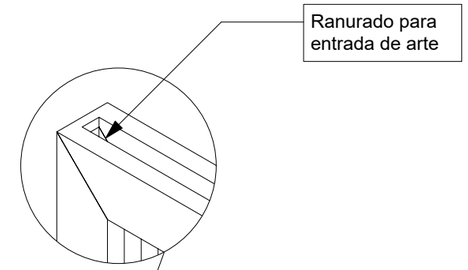

5 Detalle ranura superior
Scale 1:1

Tamaño papel 100x14 cm.
Tamaño del arte: 98.6x12 cm (área punteada). Se debe dejar 1 cm en contorno libre de textos.

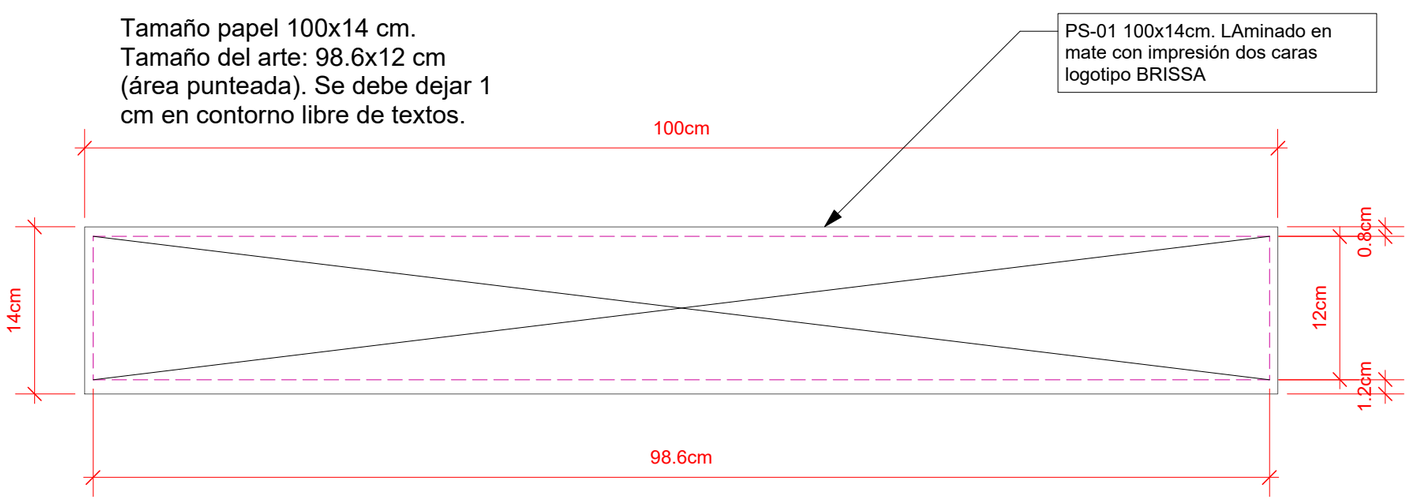

3 Tamaño PS & Papel
Scale 1:2

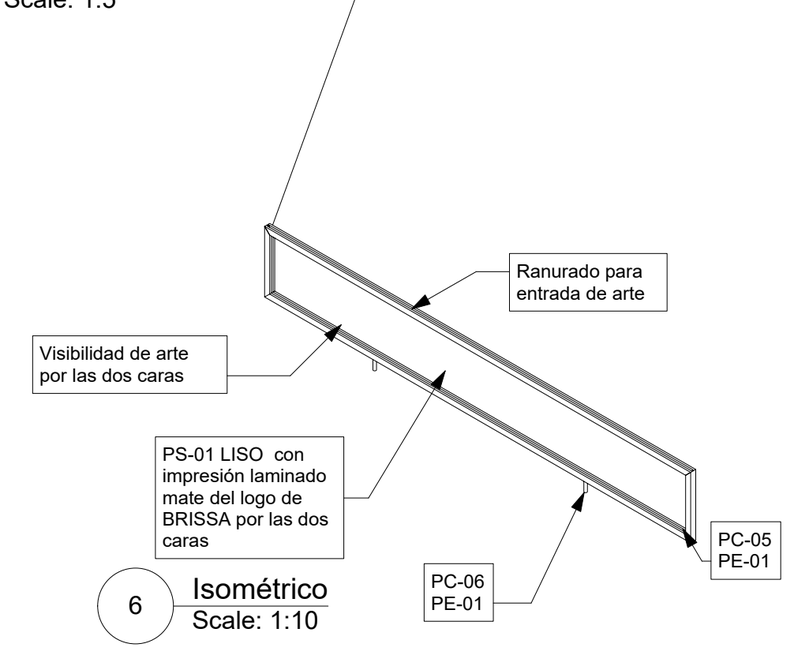

6 Isométrico
Scale: 1:10

Actualizado:1 de octubre de 2015

No.	Date	Issue Notes	No.	Date	Revision Notes	Zone	Appr

Designed By: Bianca Castillo
Drawn By: Bianca Castillo
Checked By: MA
Reviewed By: Marcelo Albertal
Submitted By: BC
Project Manager: Marcelo Albertal
Date: 06/05/15
Revision: Revision
Project ID: MADI
Drawing Code: Drawing Code
CAD File Name: Muebles_Brissa
Plot Date: 00/00/00

Design Firm: MADI
Calle 88 #10-62 Bogota, DC, Colombia
3017867314
biancacastillog@gmail.com

Consultant: Marcelo Albertal design International

Project Title: Mobiliario BRISSA 2015

Sheet Title: BR-181 Porta-aviso Góndola

Scale: Ver escala de cada dibujo

Sheet No. 75 of 83

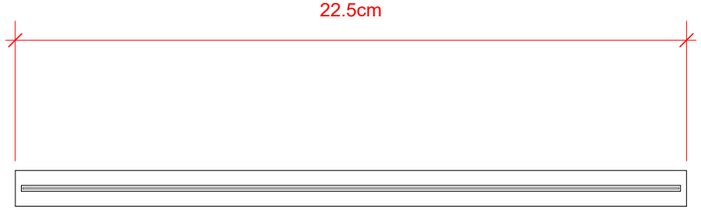

1 Vista Superior
Scale 1:2

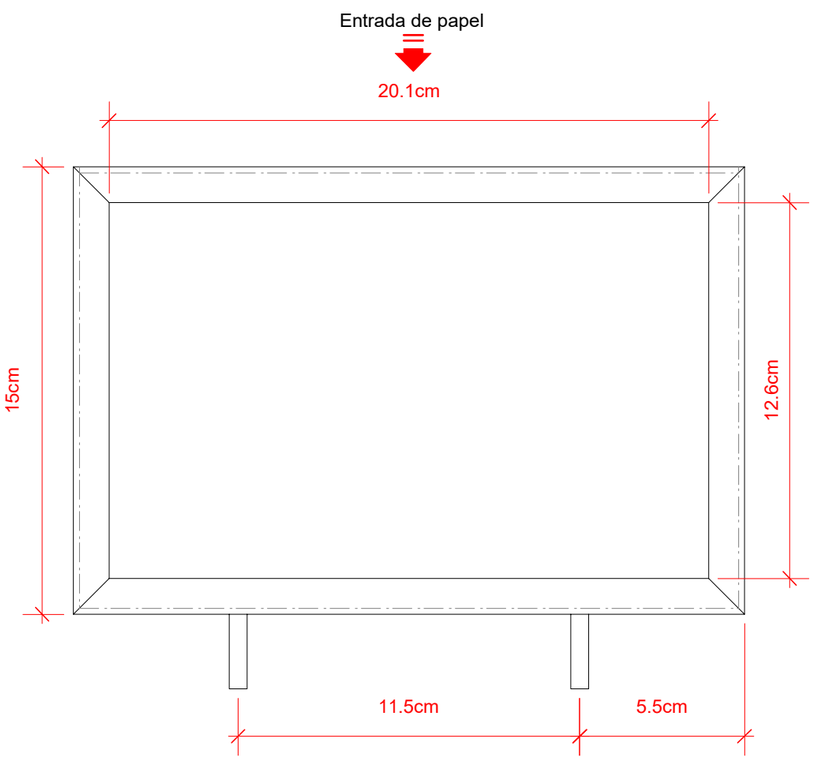

2 Vista Frontal
Scale 1:2

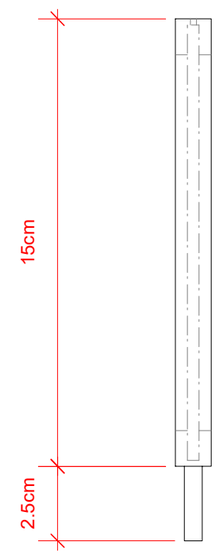

3 Vista Lateral
Scale 1:2

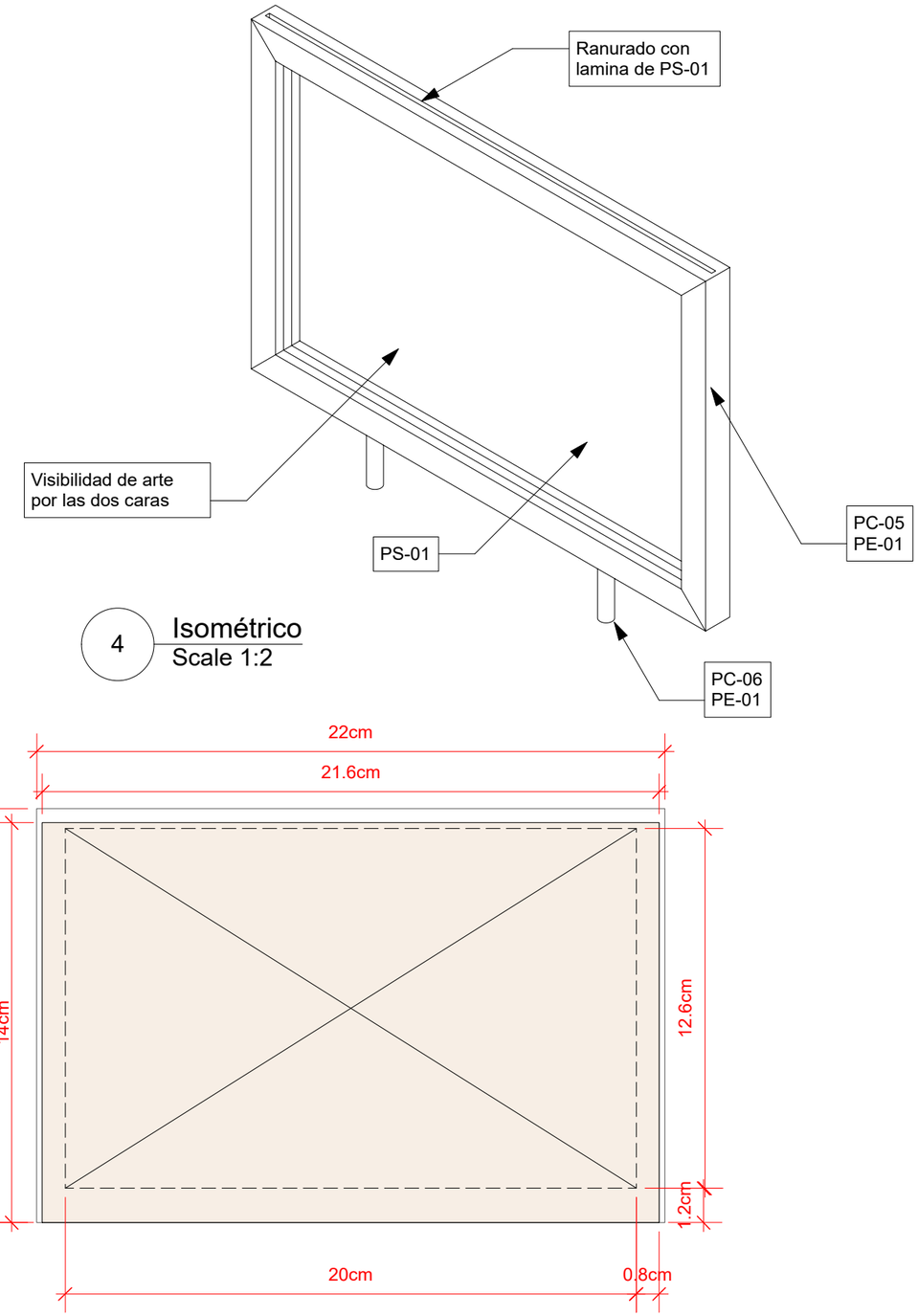

4 Isométrico
Scale 1:2

5 Tamaño PS & Papel
Scale 1:2

Tamaño papel 21.6x14cm.
Tamaño del arte: 20x12.6 cm
(área punteada). Se debe dejar 1
cm en contorno libre de textos.

Actualizado:1 de octubre de 2015

No.	Date	Issue Notes	No.	Date	Revision Notes	Zone	Appr

Date 06/05/15
Revision Revision
Project ID MADI
Drawing Code Drawing Code
CAD File Name Muebles_Brissa
Plot Date 00/00/00

Designed By Blanca Castillo
Drawn By Blanca Castillo
Checked By MA
Reviewed By Marcelo Albertal
Submitted By BC
Project Manager Marcelo Albertal

Design Firm
MADI
Calle 88 #10-62 Bogota, DC, Colombia
3017867314
biancacastillog@gmail.com

Consultant
Marcelo Albertal design International

Project Title
Mobiliario BRISSA
2015

Sheet Title
BR-182 Aviso Porta-almohadas

Scale
Ver escala de cada dibujo

Sheet No.
76
of
83

Montaje Armarios en tienda

PARTES

1. BASE. Base sobre piso con huecos para ensamble de laterales. Guardapies. En trasero con caja para ajuste sobre guardaescobas.
2. LATERALES. Partes laterales con espigos en extremos para ajuste en cajas de BASE y CABEZOTE. Con L de metal provisionales durante el montaje para anclaje de LISTONES DE MADERA EN CRUZ, se deben retirar al finalizar el montaje. Se ubican en la parte de atrás.
3. HERRAJES BR-146. Herrajes montados en cremallera para descolgar CABEZOTE.
4. CABEZOTE. Con caja para descolgado en HERRAJES y LATERALES.

PIEZAS NECESARIAS

A. L metálicas
B. Listones de madera con corte a 45 en esquinas según Armario BR-155 o BR-156

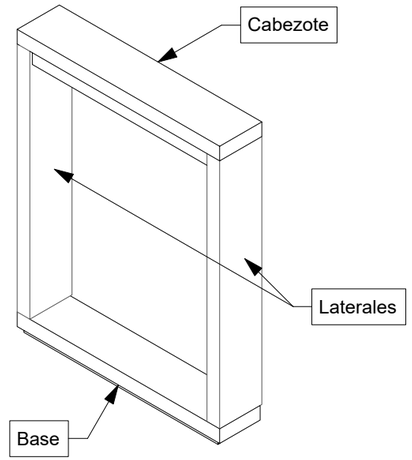

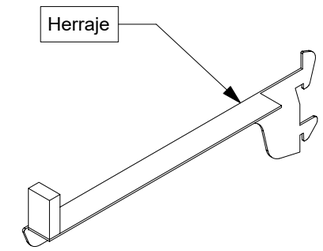

Actualizado:1 de octubre de 2015

1. Ubicar Base en el piso

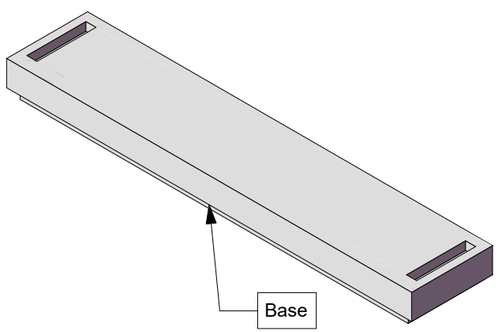

Sentido hacia el muro

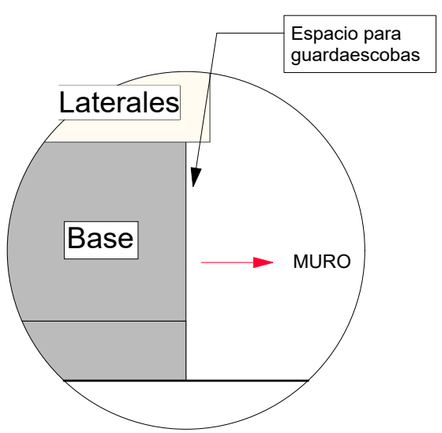

2. Ensartar Laterales en Base

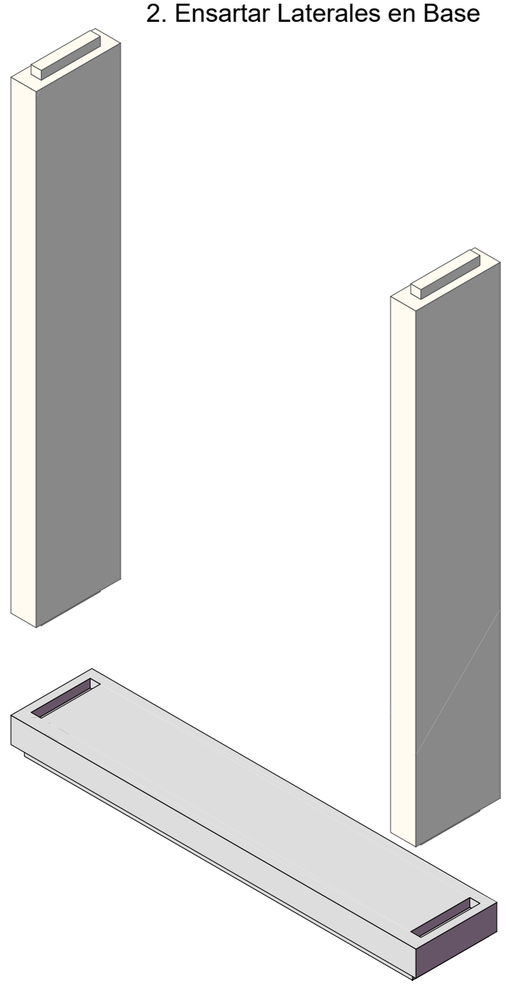

3. Amarrar laterales con L de metal y listones de madera formando una X para mantener estables los laterales.

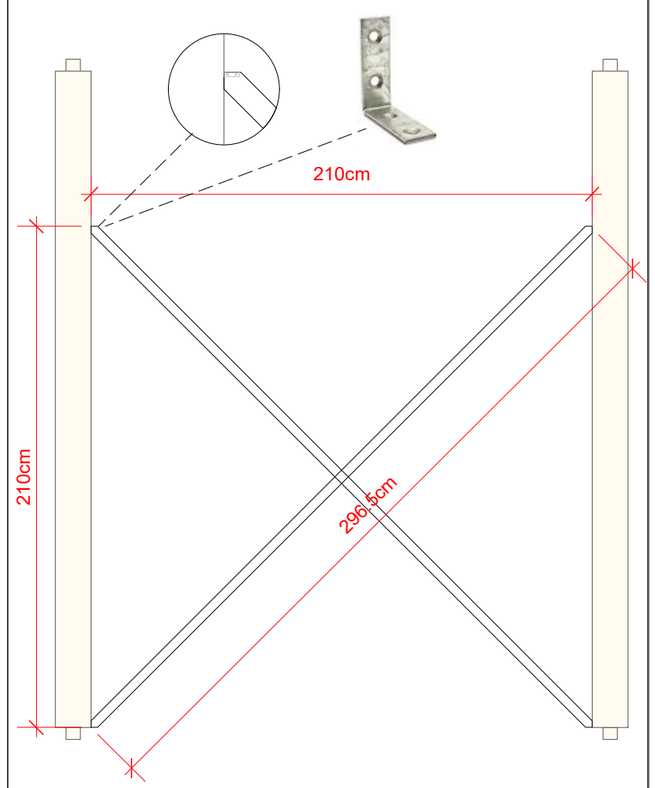

4. Montaje de herrajes en Cremallera.

5. Ajustar Cabezote en herrajes y bajarlo sobre los parales.

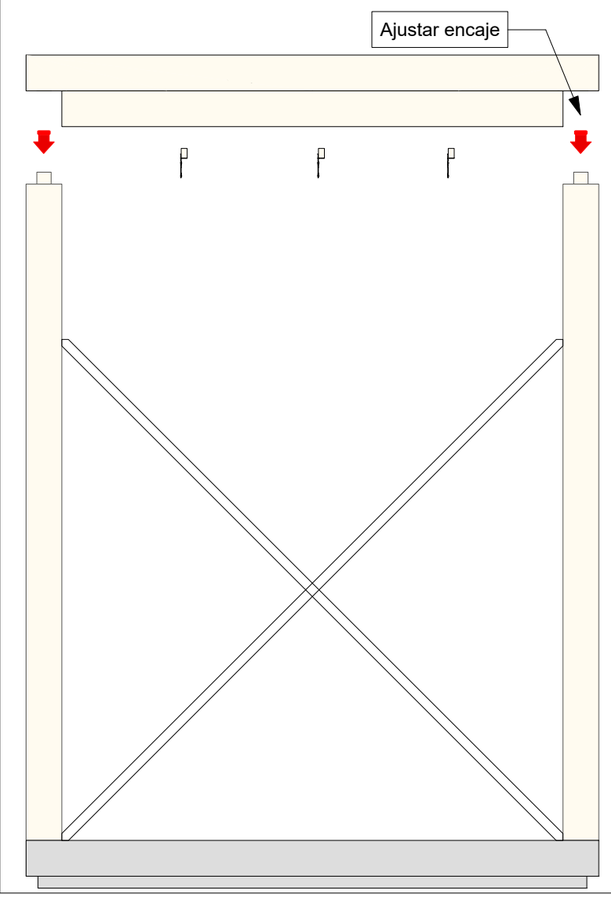

Designed By	Bianca Castillo
Drawn By	Bianca Castillo
Checked By	MA
Reviewed By	Marcelo Albertal
Submitted By	BC
Project Manager	Marcelo Albertal
Date	06/05/15
Revision	Revision
Project ID	MADI
Drawing Code	Drawing Code
CAD File Name	Muebles_Brissa
PDM Code	00/00/00

Appr | Zone | Revision Notes | Date | No. | Issue Notes | Date | No.

Design Firm: MADI
Calle 88 #10-62 Bogota, DC, Colombia
3017867314
biancacastillog@gmail.com

Consultant: Marcelo Albertal design International

Project Title: Mobiliario BRISSA 2015

Sheet Title: BR-155-156 Montaje Armario

Scale: Ver escala de cada dibujo

Sheet No. 77 of 83

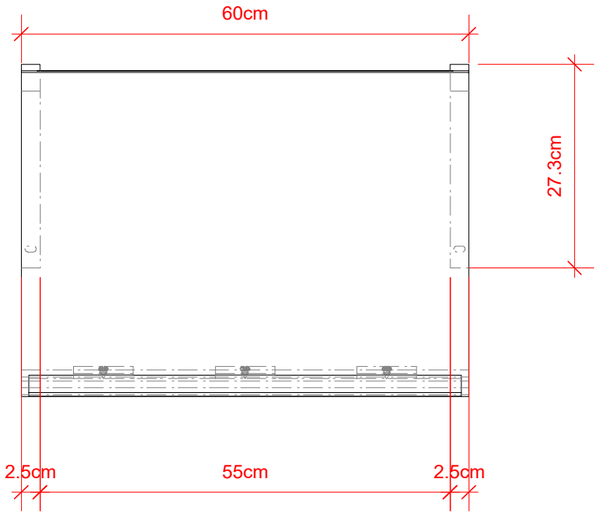

1 Vista Superior
Scale: 1:8

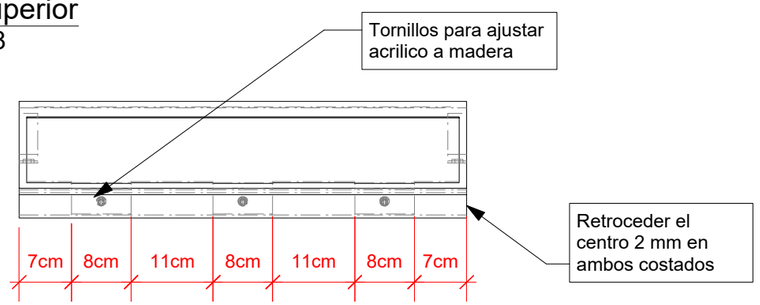

2 Vista Frontal
Scale: 1:8

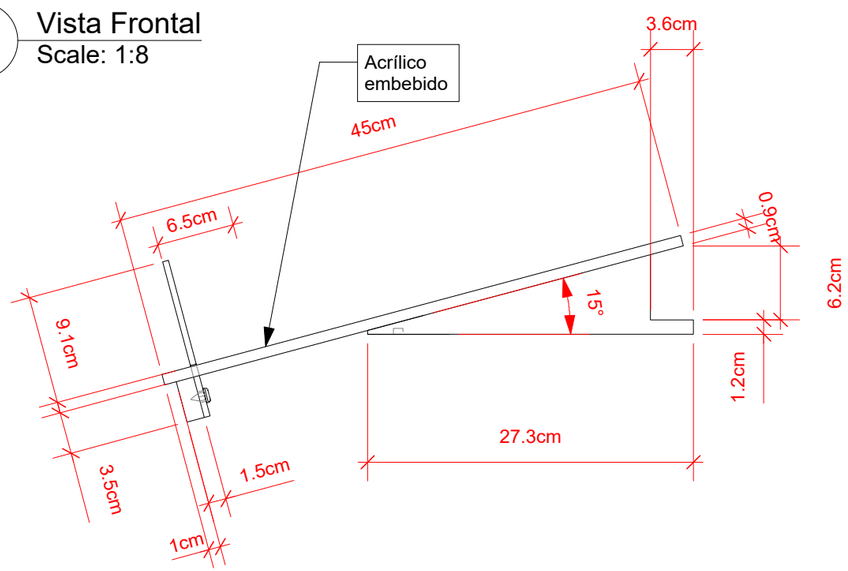

3 Vista Lateral
Scale: 1:5

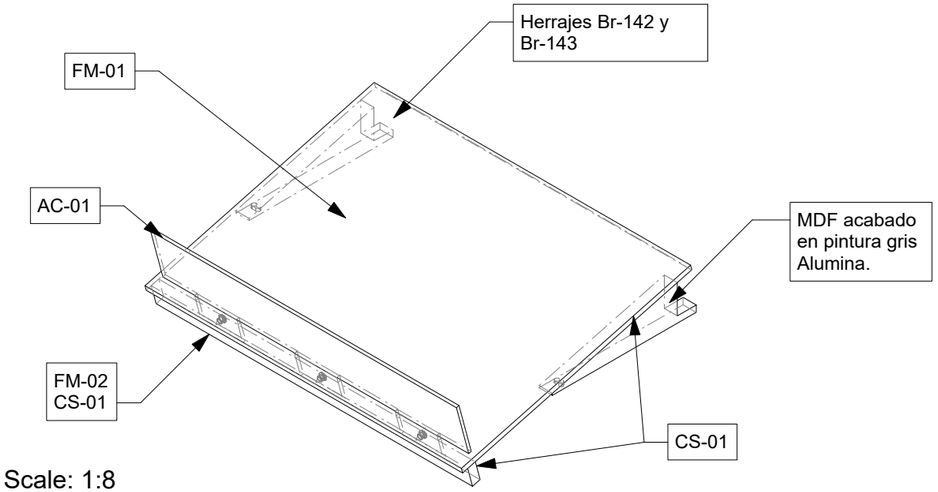

4 Scale: 1:8
Isometrico

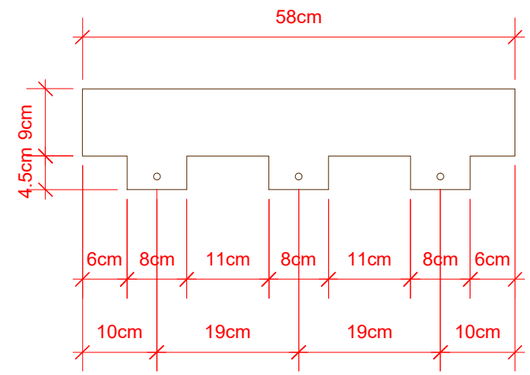

7 Desarrollo Acrílico
Scale: 1:8

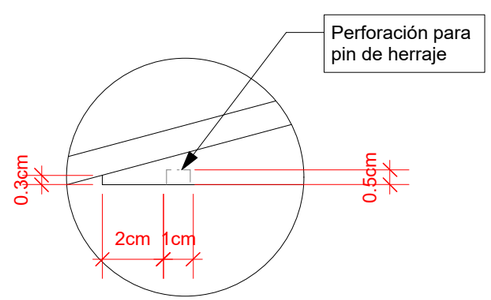

5 Vista Lateral
Scale 1:2

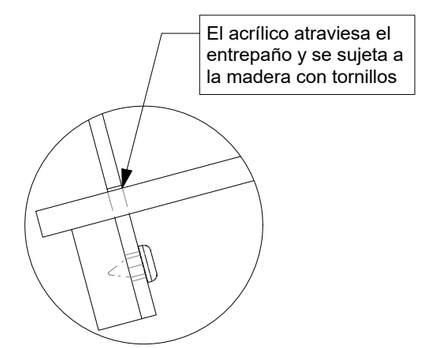

6 Vista Lateral
Scale 1:2

Actualizado:1 de octubre de 2015

No.	Date	Issue Notes	No.	Date	Revision Notes	Zone	Appr

Designed By: Blanca Castillo
Drawn By: Blanca Castillo
Checked By: MA
Reviewed By: Marcelo Albertal
Submitted By: BC
Project Manager: Marcelo Albertal
Date: 06/05/15
Revision: Revision
Project ID: MADI
Drawing Code: Drawing Code
CAD File Name: Muebles_Brissa
Full Date: 00/00/00

Design Firm: MADI
Calle 88 #10-62 Bogota, DC, Colombia
3017867314
biancacastillog@gmail.com

Consultant: Marcelo Albertal design International

Project Title: Mobiliario BRISSA 2015

Sheet Title: BR-128 Entrepaño Individuales

Scale: Ver escala de cada dibujo

Sheet No.
78
of
83

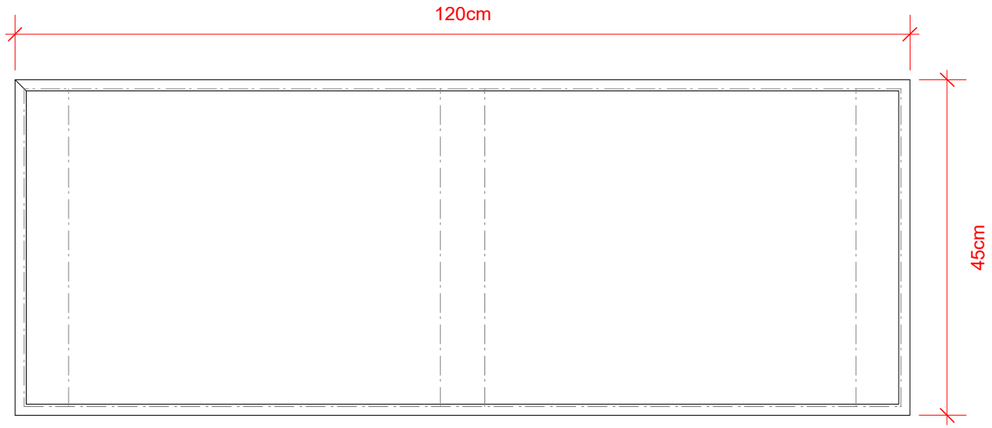

1 Vista Superior
Scale: 1:8

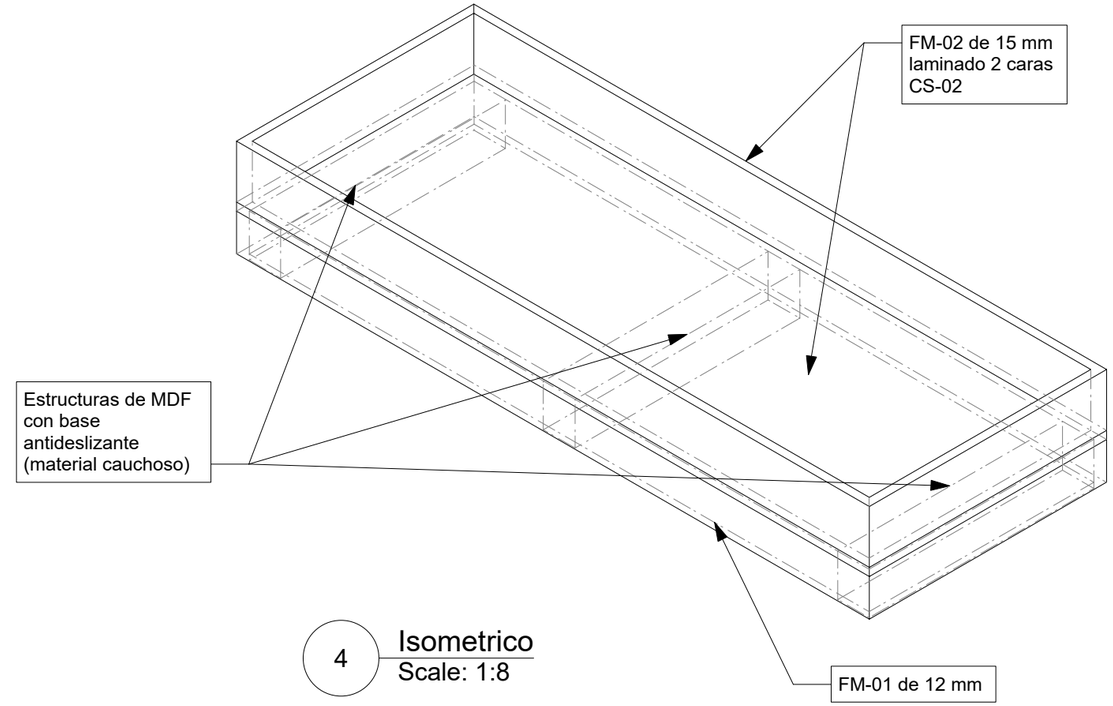

4 Isometrico
Scale: 1:8

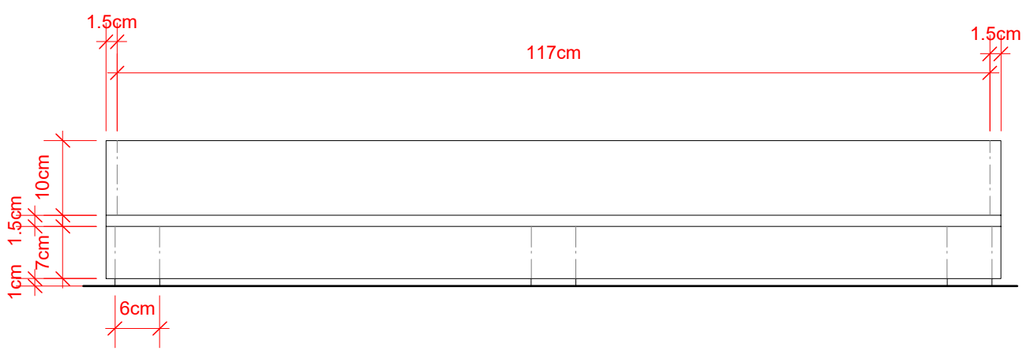

2 Vista Lateral
Scale: 1:8

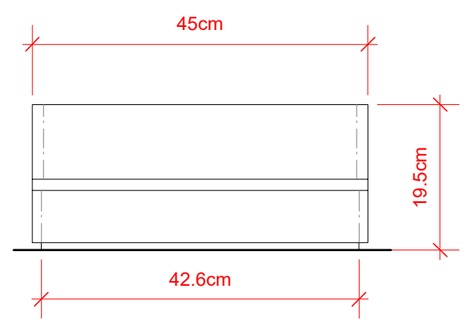

3 Vista Lateral
Scale: 1:8

Actualizado:1 de octubre de 2015

Designed By: Blanca Castillo	Date: 06/05/15		
Drawn By: Blanca Castillo	Revision: Revision		
Checked By: MA	Project ID: MADI		
Reviewed By: Marcelo Albertal	Drawing Code: Drawing Code		
Submitted By: BC	CAD File Name: Muebles_Brissa		
Project Manager: Marcelo Albertal	Revision: 00/00/00		

Appr | Zone | Revision Notes | Date | No. | Issue Notes | Date | No.

Design Firm
MADI
Calle 88 #10-62 Bogota, DC, Colombia
3017867314
biancacastillog@gmail.com

Consultant
Marcelo Albertal design International

Project Title
Mobiliario BRISSA
2015

Sheet Title
BR-129 Tarima Tapetes

Scale
Ver escala de cada dibujo

Sheet No.
79
of
83

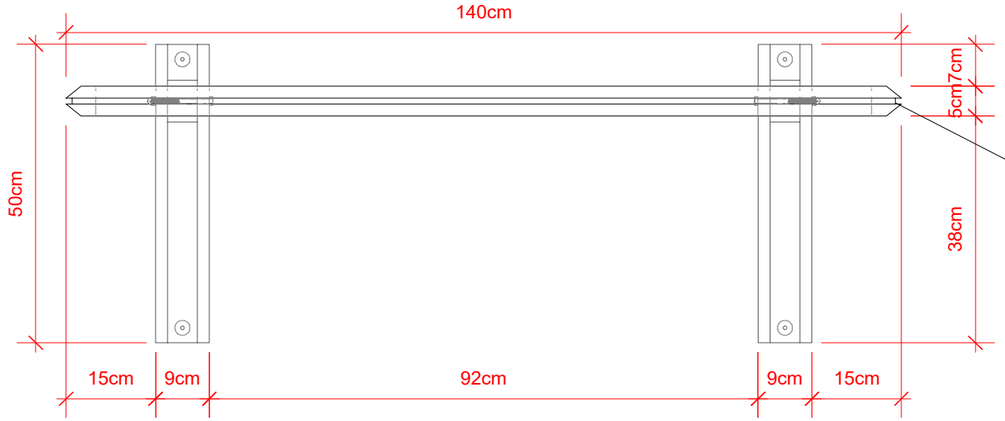

1 Vista Superior
Scale: 1:10

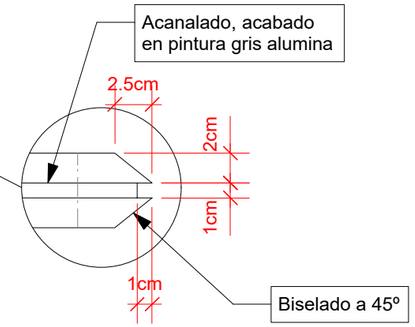

3 Detalle Biselado
Scale: 1:4

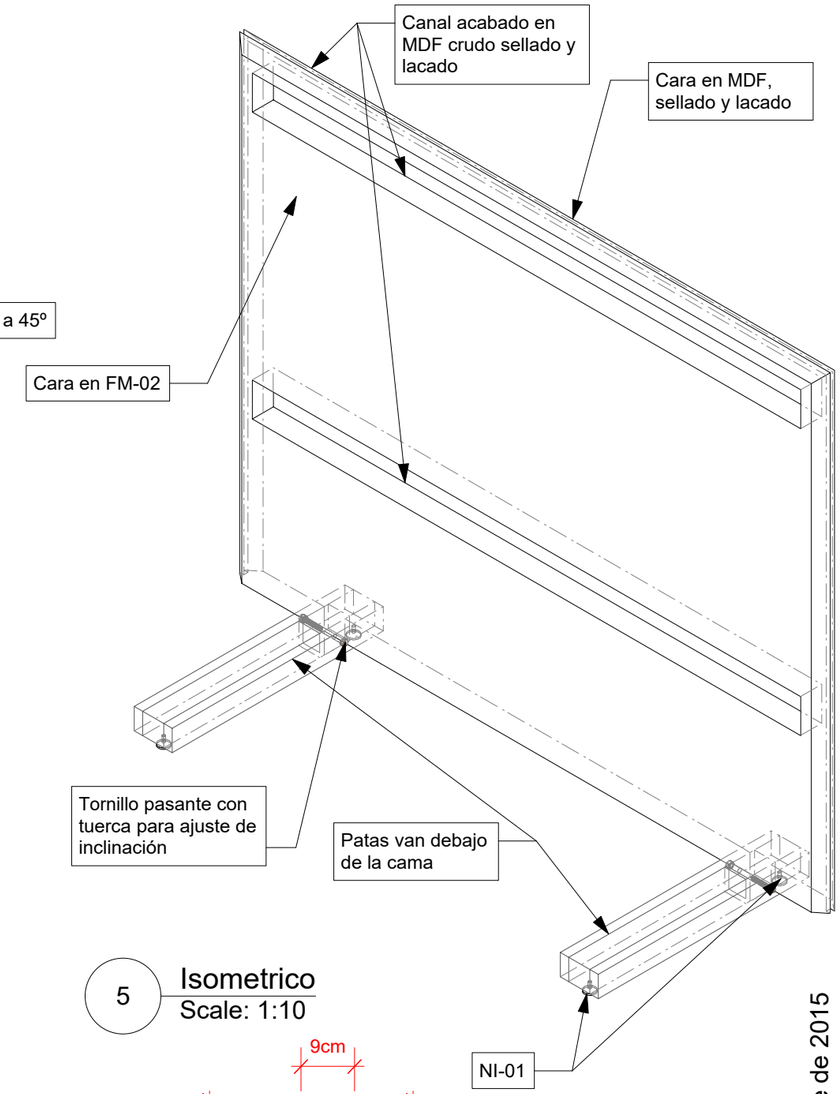

5 Isometrico
Scale: 1:10

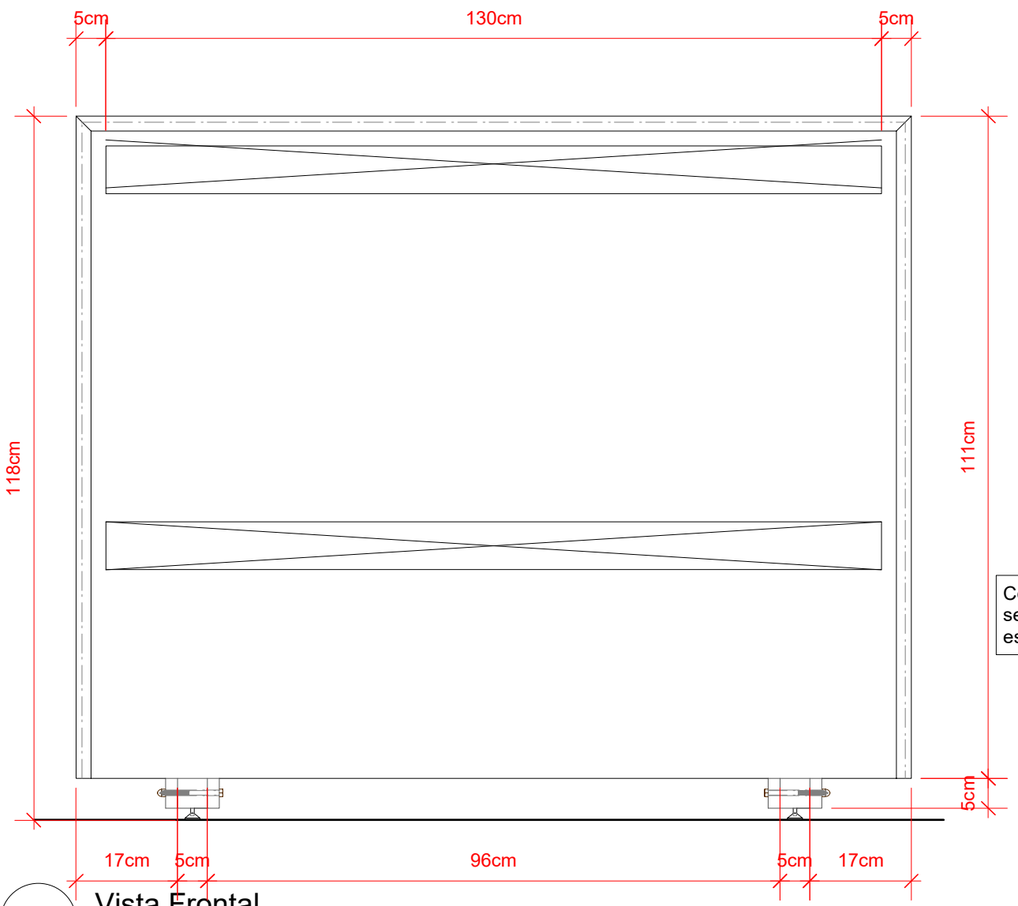

2 Vista Frontal
Scale: 1:10

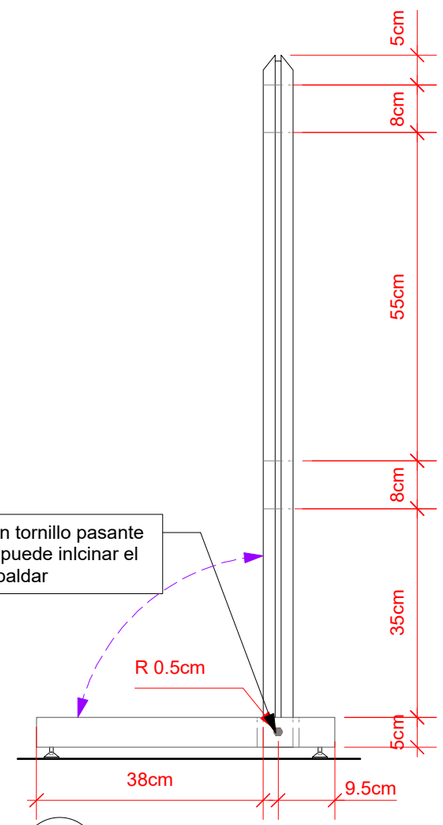

4 Vista Lateral
Scale: 1:10

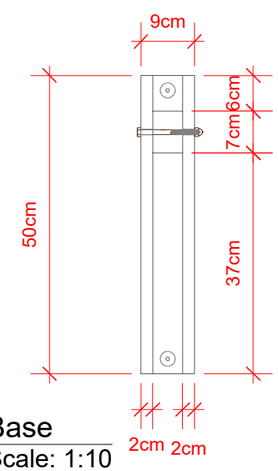

6 Base
Scale: 1:10

NOTA:
El objetivo es que se pueda usar por las dos caras. En el caso del MDF se pueda pintar o forrar.

Actualizado: 1 de octubre de 2015

Designed By: Bianca Castillo	Date: 06/05/15		
Drawn By: Bianca Castillo	Revision: Revision		
Checked By: MA	Project ID: MADI		
Reviewed By: Marcelo Albertal	Drawing Code: Drawing Code		
Submitted By: BC	CAD File Name: Muebles_Brissa		
Project Manager: Marcelo Albertal	Part Code: 00/00/00		

Design Firm: MADI
Calle 88 #10-62 Bogota, DC, Colombia
3017867314
biancacastillog@gmail.com

Consultant: Marcelo Albertal design International

Project Title: Mobiliario BRISSA 2015

Sheet Title: BR-183 Espaldar Cama

Scale: Ver escala de cada dibujo

Sheet No. 80 of 83

No.	Date	Issue Notes	Revision Notes	Zone	Appr

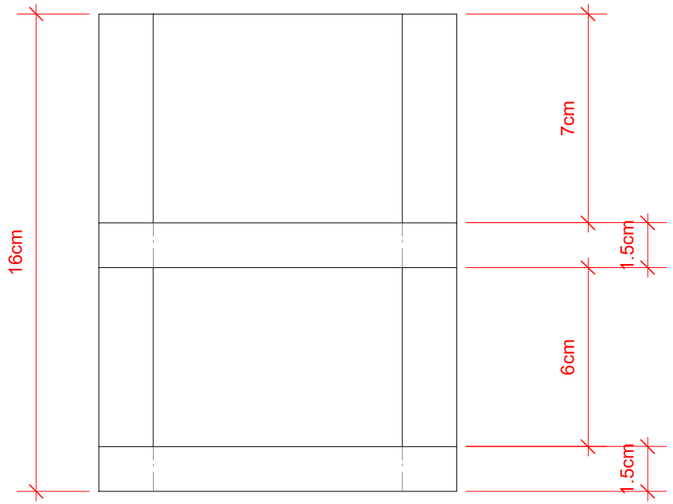

1 Vista Superior
Scale 1:2

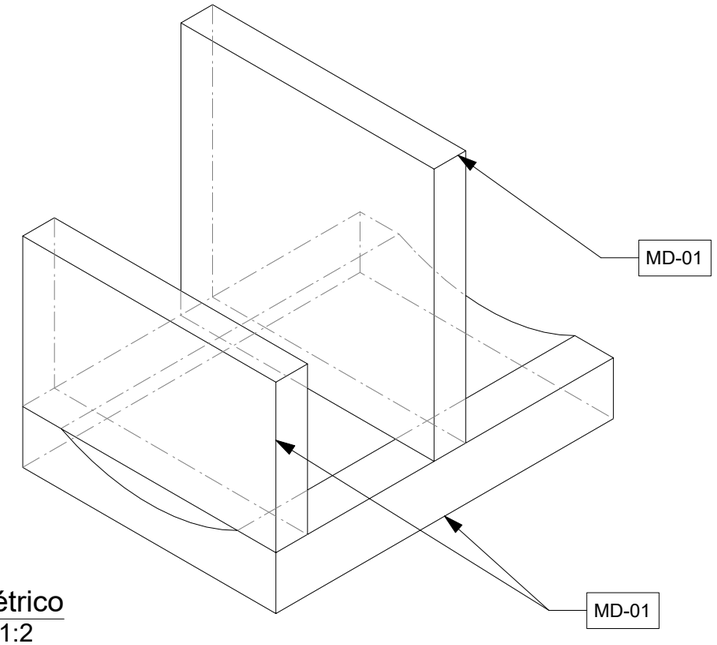

3 Isométrico
Scale 1:2

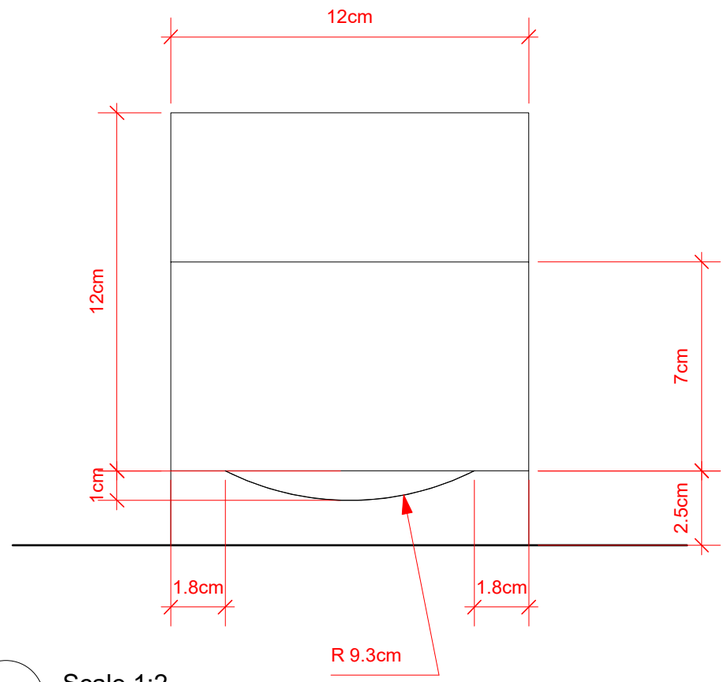

2 Scale 1:2
Vista Frontal

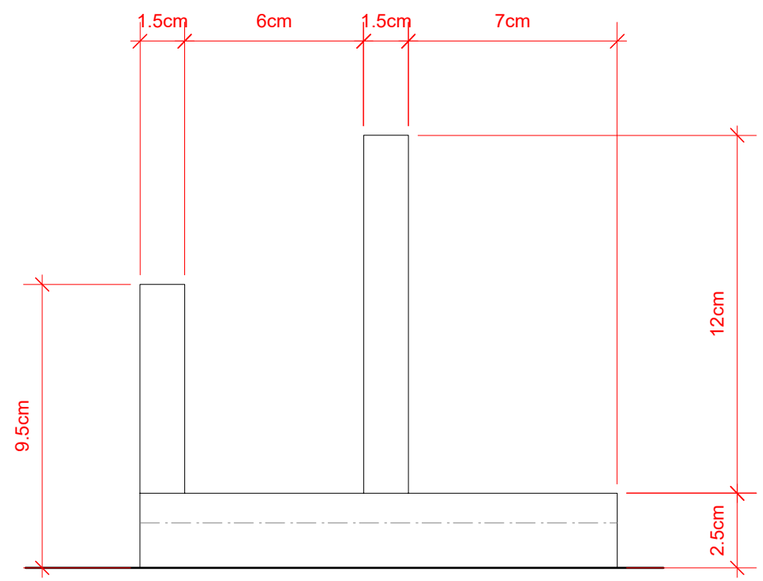

4 Vista Lateral
Scale 1:2

Actualizado: 1 de octubre de 2015

No.	Date	Issue Notes	No.	Date	Revision Notes	Zone	Appr

Designed By: Bianca Castillo
Drawn By: Bianca Castillo
Checked By: MA
Reviewed By: Marcelo Albertal
Submitted By: BC
Project Manager: Marcelo Albertal
Date: 06/05/15
Revision: Revisión
Project ID: MADI
Drawing Code: Drawing Code
CAD File Name: Muebles_Brissa
PDF/Plot Date: 00/00/00

Design Firm: MADI
Calle 88 #10-62 Bogota, DC, Colombia
3017867314
biancacastillog@gmail.com

Consultant: Marcelo Albertal design International

Project Title: Mobiliario BRISSA 2015

Sheet Title: BR-184 Base unidad

Scale: Ver escala de cada dibujo

Sheet No. 81 of 83

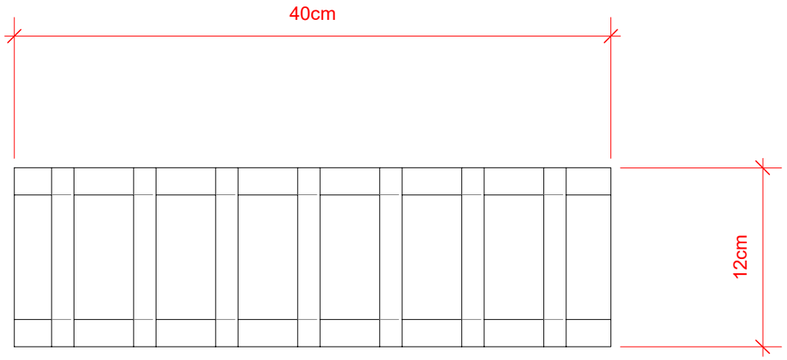

1 Vista Superior
Scale: 1:4

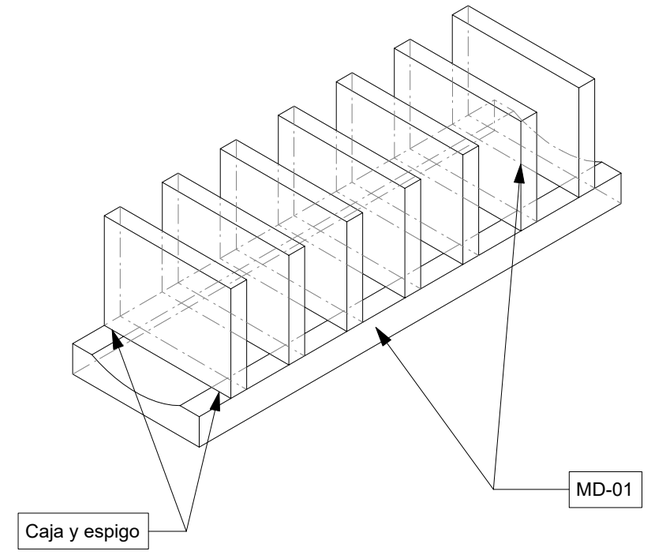

3 Isometrico
Scale: 1:4

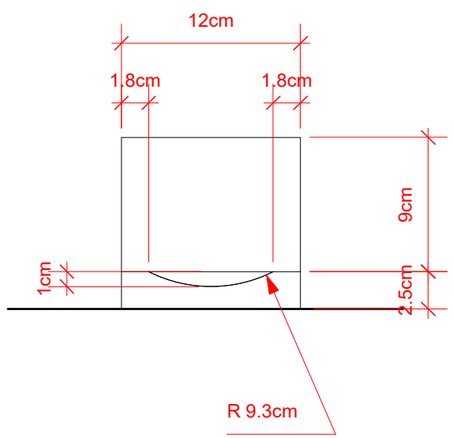

2 Vista Lateral
Scale: 1:4

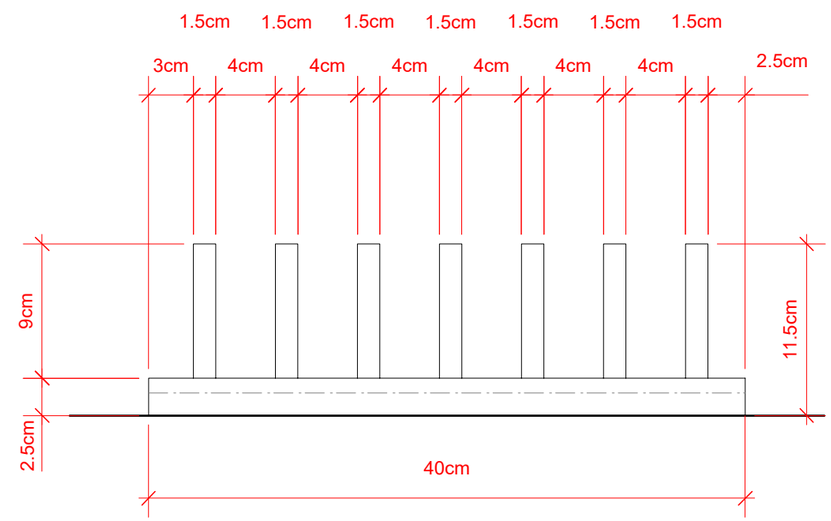

4 Vista Lateral
Scale: 1:4

Actualizado: 1 de octubre de 2015

No.	Date	Issue Notes	No.	Date	Revision Notes	Zone	Appr

Date 06/05/15
Revision Revisión
Project ID MADI
Drawing Code Drawing Code
CAD File Name Muebles_Brissa
Revision 00/00/00

Designed By Blanca Castillo
Drawn By Blanca Castillo
Checked By MA
Reviewed By Marcelo Albertal
Submitted By BC
Project Manager Marcelo Albertal

Design Firm
MADI
Calle 88 #10-62 Bogota, DC, Colombia
3017867314
biancacastilloq@gmail.com

Consultant
Marcelo Albertal design International

Project Title
Mobiliario BRISSA
2015

Sheet Title
BR-185 Base múltiple

Scale
Ver escala de cada dibujo

Sheet No.
82
of
83

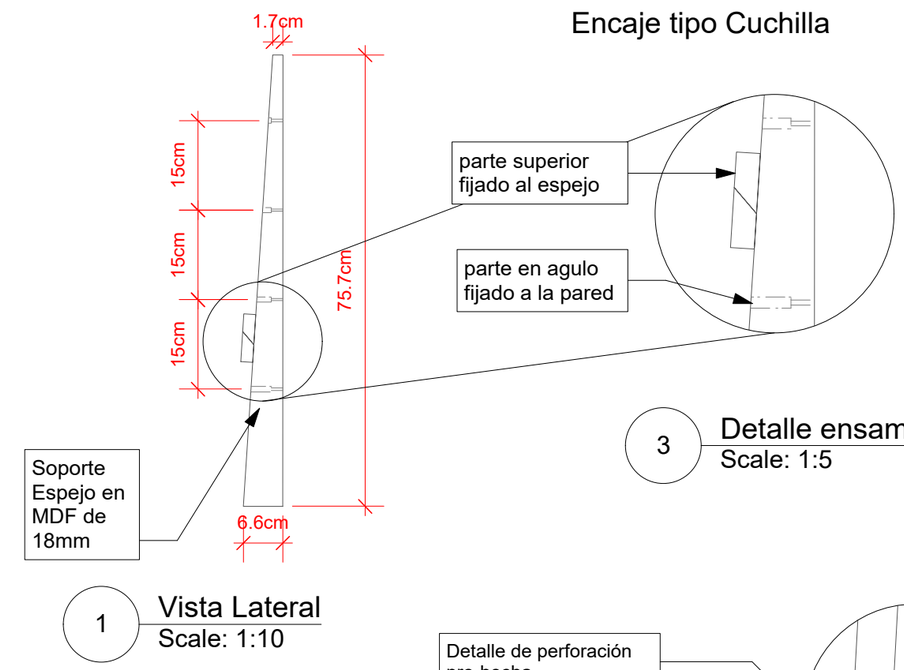

3 Detalle ensamble
Scale: 1:5

1 Vista Lateral
Scale: 1:10

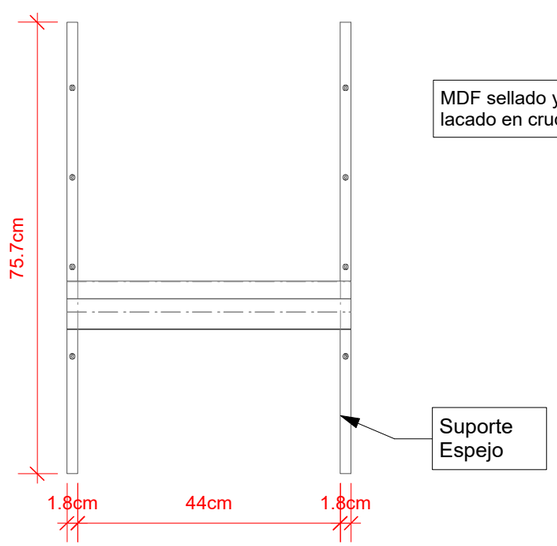

2 Vista Frontal
Scale: 1:10

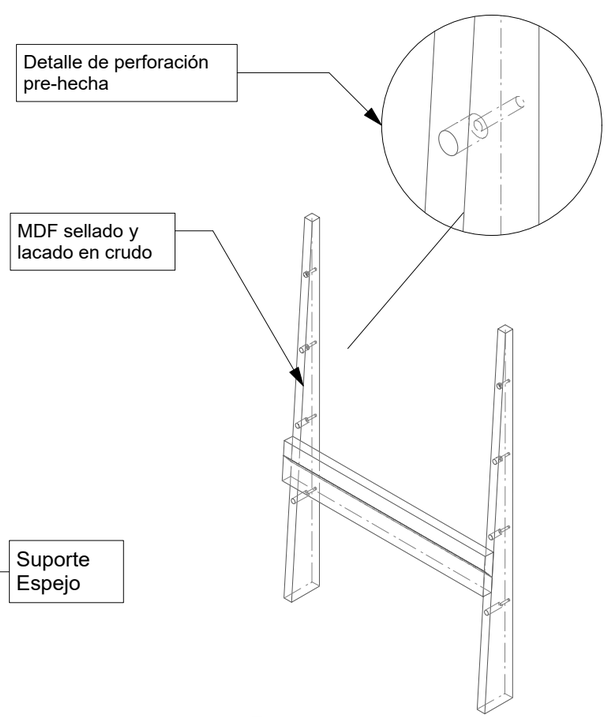

4 Isométrico
Scale: 1:10

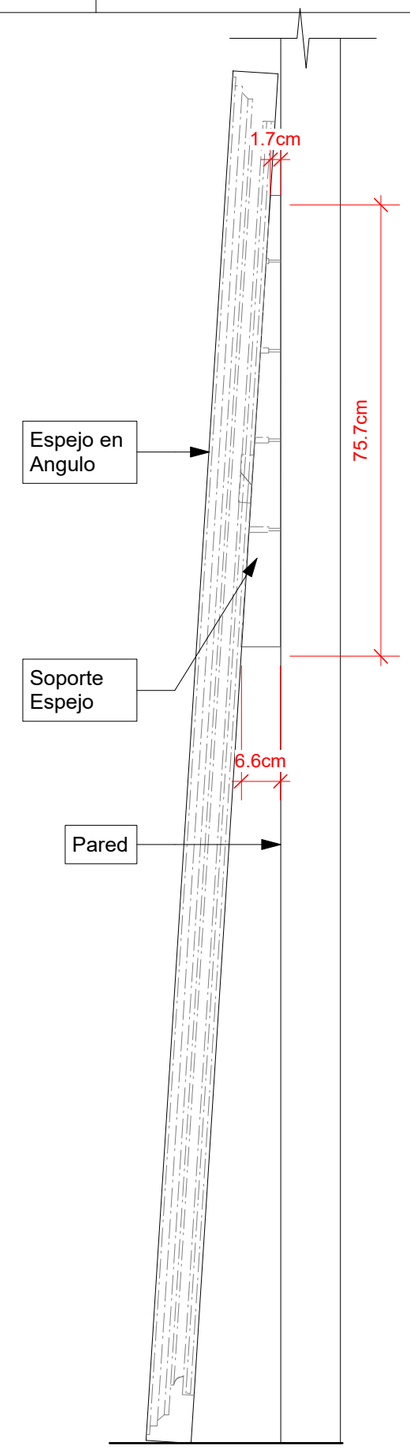

5 Vista Lateral
Scale: 1:10

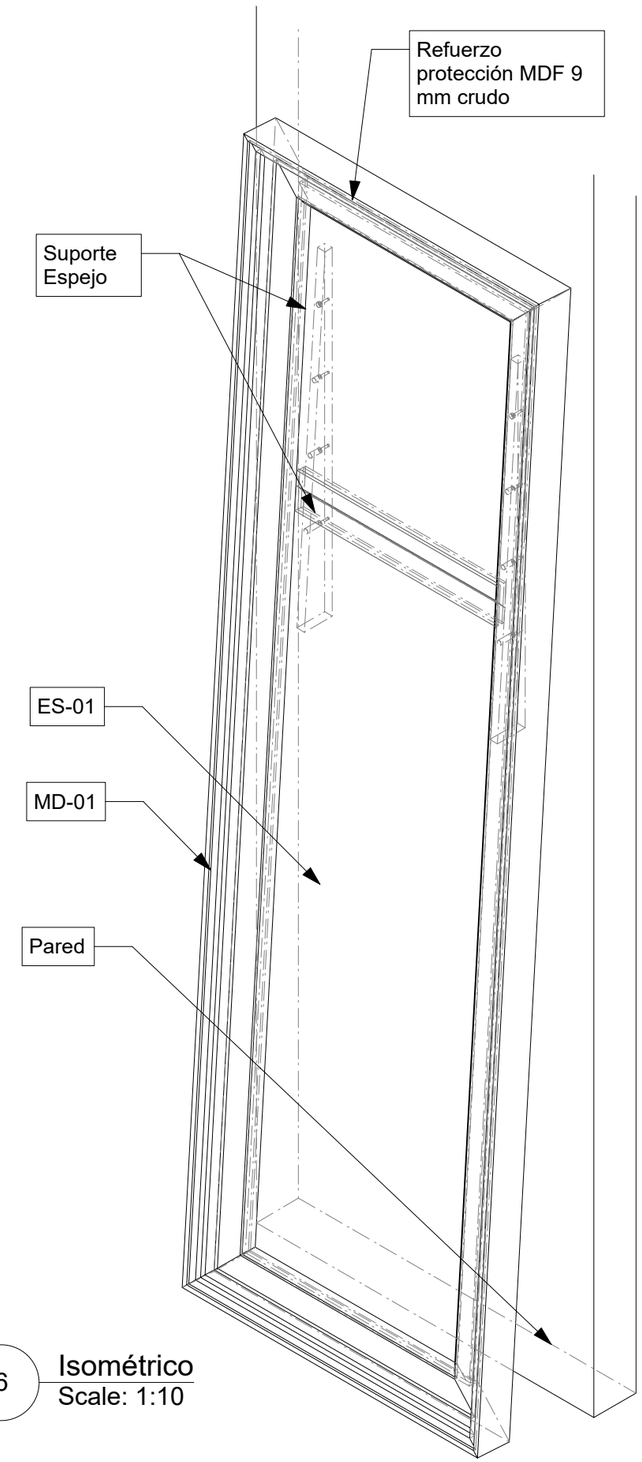

6 Isométrico
Scale: 1:10

Actualizado:1 de octubre de 2015

No.	Date	Issue Notes	Revision Notes	Date	No.	Zone	Appr

Designed By: Bianca Castillo
Drawn By: Bianca Castillo
Checked By: MA
Reviewed By: Marcelo Albertal
Submitted By: BC
Project Manager: Marcelo Albertal
Date: 06/05/15
Revision: Revisión
Project ID: MADI
Drawing Code
CAD File Name: Muebles_Brissa
Pict Date: 0000000

Design Firm: MADI
Calle 88 #10-62 Bogota, DC, Colombia
3017867314
biancacastillog@gmail.com

Consultant: Marcelo Albertal design International

Project Title: Mobiliario BRISSA 2015

Sheet Title: BR-150 Apoyo Espejo

Scale: Ver escala de cada dibujo

Sheet No. 83 of 83